ООО "Техэнком" Контрольно-измерительные приборы и оборудование www.tehencom.com

Agilent
2-Port and 4-Port
PNA-X Network Analyzer

N5244A - 10 MHz to 43.5 GHz
N5245A - 10 MHz to 50.0 GHz

Data Sheet and

Technical Specifications

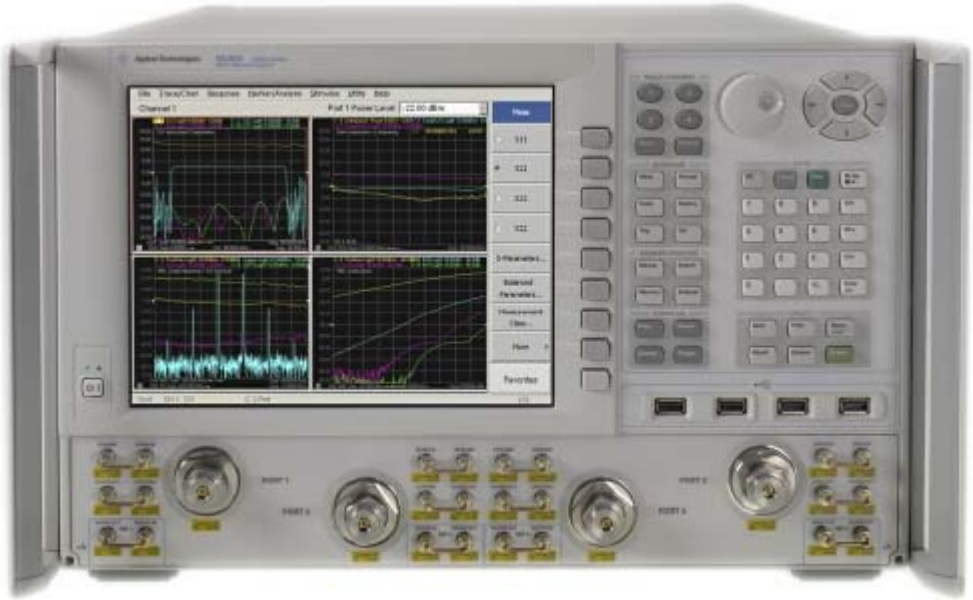

Agilent Technologies

ООО "Техэнком" Контрольно-измерительные приборы и оборудование www.tehencom.com

Documentation Warranty

THE MATERIAL CONTAINED IN THIS DOCUMENT IS PROVIDED "AS IS," AND IS SUBJECT TO BEING CHANGED, WITHOUT NOTICE, IN FUTURE EDITIONS. FURTHER, TO THE MAXIMUM EXTENT PERMITTED BY APPLICABLE LAW, AGILENT DISCLAIMS ALL WARRANTIES, EITHER EXPRESS OR IMPLIED WITH REGARD TO THIS MANUAL AND ANY INFORMATION CONTAINED HEREIN, INCLUDING BUT NOT LIMITED TO THE IMPLIED WARRANTIES OF MERCHANTABILITY AND FITNESS FOR A PARTICULAR PURPOSE. AGILENT SHALL NOT BE LIABLE FOR ERRORS OR FOR INCIDENTAL OR CONSEQUENTIAL DAMAGES IN CONNECTION WITH THE FURNISHING, USE, OR PERFORMANCE OF THIS DOCUMENT OR ANY INFORMATION CONTAINED HEREIN. SHOULD AGILENT AND THE USER HAVE A SEPARATE WRITTEN AGREEMENT WITH WARRANTY TERMS COVERING THE MATERIAL IN THIS DOCUMENT THAT CONFLICT WITH THESE TERMS, THE WARRANTY TERMS IN THE SEPARATE AGREEMENT WILL CONTROL.

DFARS/Restricted Rights Notice

If software is for use in the performance of a U.S. Government prime contract or subcontract, Software is delivered and licensed as “Commercial computer software” as defined in DFAR 252.227-7014 (June 1995), or as a “commercial item” as defined in FAR 2.101(a) or as “Restricted computer software” as defined in FAR 52.227-19 (June 1987) or any equivalent agency regulation or contract clause. Use, duplication or disclosure of Software is subject to Agilent Technologies’ standard commercial license terms, and non-DOD Departments and Agencies of the U.S. Government will receive no greater than Restricted Rights as defined in FAR 52.227-19(c)(1-2) (June 1987). U.S. Government users will receive no greater than Limited Rights as defined in FAR 52.227-14 (June 1987) or DFAR 252.227-7015 (b)(2) (November 1995), as applicable in any technical data.

ООО "Техэнком" Контрольно-измерительные приборы и оборудование www.tehencom.com

Definitions **5**

Corrected System Performance **6**

System Dynamic Range and Receiver Dynamic Range 6

Table 1. System Dynamic Range Option 200 or 400, and Receiver Dynamic Range – All Options .. 6

Table 2a. System Dynamic Range at Test Port [1] - Option 200 or 400 8

Table 2b. System Dynamic Range at Test Port [1] - Option 219 or 419 9

Table 2c. System Dynamic Range at Test Port [1] - Option 224 10

Table 2d. System Dynamic Range at Test Port [1] - Option 224 or 423 11

Table 3a. Extended Dynamic Range at Direct Receiver Access Input[1] - Option 200 or 400 12

Table 3b. Extended Dynamic Range at Direct Receiver Access Input[1] - Option 219 or 419 13

Table 3c. Extended Dynamic Range at Direct Receiver Access Input[1] - Option 224 14

Table 3d. Extended Dynamic Range at Direct Receiver Access Input[1] - Option 224 or 423 15

N5244A and N5245A Corrected System Performance - All Options 16

Table 4. 85056A Calibration Kit 16

Table 5. N4693A 4-Port Electronic Calibration Module 19

Uncorrected System Performance **22**

Table 6. Error Terms[1] 22

Test Port Output **25**

Table 7. Frequency Information - All Options 25

Table 8a. Maximum Leveled Power - Option 200 or 400 25

Table 8b. Maximum Leveled Power - Option 219 or 419 29

Table 8c. Maximum Leveled Power - Option 224 - Source 1 31

Table 8d. Maximum Leveled Power - Option 224 - Source 2 32

Table 8e. Maximum Leveled Power - Option 423 34

Table 8f. Maximum Leveled Power - Option 224 or 423 35

Table 9a. Power Level Accuracy - All Options 37

Table 9b. Power Level Linearity - All Options 37

Table 9c. Power Level Linearity - All Options 37

Table 9d. Power Level Linearity - Option 224 38

Table 10a. Power Sweep Range - Option 200 or 400 38

Table 10b. Power Sweep Range - Option 219 or 419 39

Table 10c. Power Sweep Range - Option 224 or 423 39

Table 10d. Power Sweep Range - Option 224 40

Table 11. Nominal Power (Preset Power) 41

Table 12. Power Resolution and Maximum/Minimum Settable Power 41

Table 13. Harmonics at Max Specified Power - All Options 41

Table 14. Non-Harmonic Spurs at Nominal Power - All Options 42

Table 15. Phase Noise - All Options 42

Test Port Input – All Options **43**

Table 16. Test Port Noise Floor[1] (dBm) 43

ООО "Техэнком" Контрольно-измерительные приборы и оборудование www.tehencom.com

Table 17. Direct Receiver Access Input Noise Floor[1] (dBm) 43
Table 18. Test Port Compression at 0.1 dB (dBm) - All Options 44
Table 19. Receiver Compression Test Port Power[1] (dBm) 44
Table 20. Trace Noise Magnitude (dB rms) 45
Table 21. Trace Noise Phase (deg rms) 45
Table 22. Reference Level Magnitude 46
Table 23. Reference Level Phase 46
Table 24. Stability Magnitude (dB/°C) 46
Table 25. Stability Phase (°/°C) 47
Table 26. Damage Input Level 47

Dynamic Accuracy 48

Table 27. Dynamic Accuracy (Specification) 48
Table 28. Test Port Input (Group Delay)[1] 58

General Information 59

Table 29. Miscellaneous Information 59
Table 30. Front Panel Information - All Options 59
Table 31. Rear Panel Information - All Options 60
Table 32. Analyzer Dimensions and Weight 64

Measurement Throughput Summary 65

Table 33. Typical Cycle Time[a] (ms) for Measurement Completion 65
Table 34. Cycle Time vs. IF Bandwidth 67
Table 35. Cycle Time vs. Number of Points 68
Table 36. Data Transfer Time (ms) 70

Specifications: Front-Panel Jumpers 71

Table 37. Measurement Receiver Inputs 72
Table 38. Reference Receiver Input 73
Table 39a. Reference Receiver Input 74
Table 39b. Reference Receiver Input 75
Table 40. Reference Output 76
Table 41a. Reference Output 77
Table 42a. Source Outputs 79
Table 43. Coupler Inputs 81

Test Set Block Diagrams 82

Figure 15. 2-Port N5244A and N5245A Base Unit Option 200 82
Figure 16. 2-Port N5244A and N5245A Option 219 82
Figure 17. 2-Port N5244A and N5245A Option 224 83
Figure 18. 4-Port N5244A and N5245A Base Unit - Option 400 83
Figure 19. 4-Port N5244A and N5245A Option 419 84
Figure 20. 4-Port N5244A and N5245A Option 423 84
Figure 21. Receiver Block Diagram 85

ООО "Техэнком" Контрольно-измерительные приборы и оборудование www.tehencom.com

This is a complete list of the technical specifications for the N5244A and N5245A PNA-X network analyzer with the following options:

Option 200, 2-port standard test set (includes six front-panel access loops) and power range. See the block diagram.

Option 219, adds 2-port extended power range, source and receiver attenuators, and bias-tees (requires Option 200). See the block diagram.

Option 224, adds an internal second source, a combiner, and mechanical switches to the 2-port analyzer (requires Option 200, 219, and 080). See the block diagram.

Option 400, 4-port standard test set (includes twelve front-panel access loops), power range, and an internal second source (Option 080 recommended). See the block diagram.

Option 419, adds 4-port extended power range, source and receiver attenuators, and bias-tees (requires Option 400). See the block diagram.

Option 423, adds an internal combiner, and mechanical switches to the 4-port analyzer (requires Option 400, 419, and 080). See the block diagram.

Note

This document provides technical specifications for the 85056A calibration kit, the N4693A 4-Port ECal module, and the N4691B 2-Port ECal module. Please download our free Uncertainty Calculator from http://www.agilent.com/find/na_calculator to generate the curves for your calibration kit and PNA setup.

Definitions

All specifications and characteristics apply over a 25 °C ±5 °C range (unless otherwise stated) and 90 minutes after the instrument has been turned on.

Specification (spec.): Warranted performance. Specifications include guardbands to account for the expected statistical performance distribution, measurement uncertainties, and changes in performance due to environmental conditions.

Characteristic (char.): A performance parameter that the product is expected to meet before it leaves the factory, but that is not verified in the field and is not covered by the product warranty. A characteristic includes the same guardbands as a specification.

Typical (typ.): Expected performance of an average unit which does not include guardbands. It is not covered by the product warranty.

Nominal (nom.): A general, descriptive term that does not imply a level of performance. It is not covered by the product warranty.

Calibration: The process of measuring known standards to characterize a network analyzer's systematic (repeatable) errors.

Corrected (residual): Indicates performance after error correction (calibration). It is determined by the quality of calibration standards and how well "known" they are, plus system repeatability, stability, and noise.

Uncorrected (raw): Indicates instrument performance without error correction. The uncorrected performance affects the stability of a calibration.

Standard: When referring to the analyzer, this includes no options unless noted otherwise.

Corrected System Performance

The specifications in this section apply for measurements made with the N5244A and N5245A analyzer with the following conditions:

- 10 Hz IF bandwidth
- No averaging applied to data
- Isolation calibration with an averaging factor of 8

System Dynamic Range and Receiver Dynamic Range

- **System Dynamic Range** is defined as the max leveled output power (spec) minus the noise floor (spec).
- **Receiver Dynamic Range** is defined as the test port compression at 0.1 dB (typical) minus the noise floor (typical).

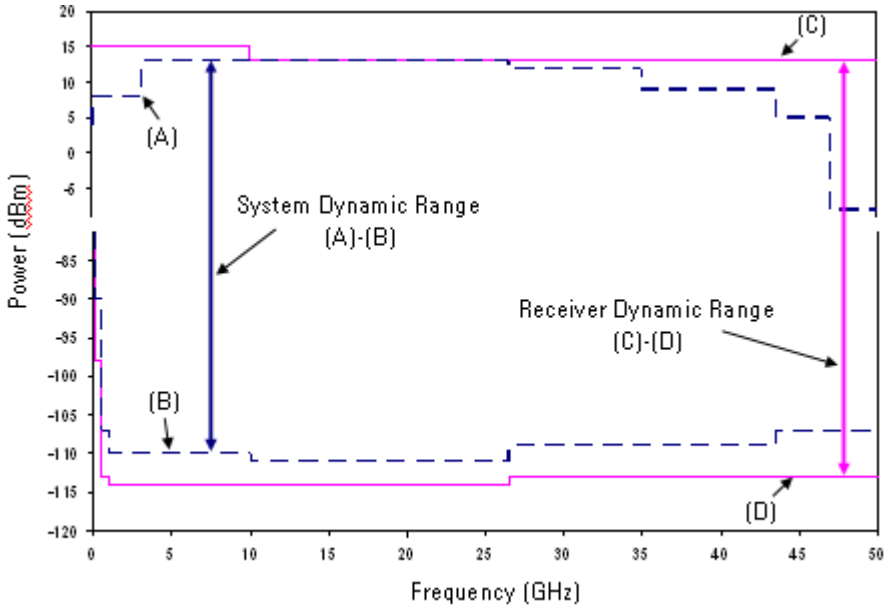

Table 1. System Dynamic Range Option 200 or 400, and Receiver Dynamic Range – All Options

Description	Specification			Typical		
	System Dynamic Range (dB)	Max Leveled Output Power (dBm)	Test Port Noise Floor (dBm)	Receiver Dynamic Range (dB)	Test Port Compression at 0.1 dB (dBm)	Test Port Noise Floor (dBm)
	(A)-(B)	(A)	(B)	(C)-(D)	(C)	(D)
Ports	**1,3**	**1,3**	**All**	**All**	**All**	**All**
10 MHz to 50 MHz[3]	74	4	-70	91	15	-76
50 MHz to 100 MHz[3]	93	8	-85	106	15	-91

100 MHz to 500 MHz[3]	98	8	-90	113	15	-98
500 MHz to 1 GHz	114	8	-106	127	15	-112
1 GHz to 2 GHz	118	8	-110	129	15	-114
2 GHz to 3.2 GHz	118	8	-110	129	15	-114
3.2 GHz to 10 GHz	123	13	-110	129	15	-114
10 GHz to 16 GHz	124	13	-111	127	13	-114
16 GHz to 20 GHz	124	13	-111	127	13	-114
20 GHz to 26.5 GHz	124	13	-111	127	13	-114
26.5 GHz to 30 GHz	120	12	-108	126	13	-113
30 GHz to 32 GHz	119	11	-108	126	13	-113
32 GHz to 35 GHz	120	12	-108	126	13	-113
35 GHz to 40 GHz	117	9	-108	126	13	-113
40 GHz to 43.5 GHz	118	9	-109	126	13	-113
43.5 GHz to 47 GHz	112	5	-107	126	13	-113
47 GHz to 50 GHz	99	-8	-107	126	13	-113

ООО "Техэнком" Контрольно-измерительные приборы и оборудование www.tehencom.com

Table 2a. System Dynamic Range at Test Port [1] - Option 200 or 400

Description	Specification (dB) at Test Port		Typical (dB) at Test Port	
	Port 1 or 3[2]	Port 2 or 4[2]	Port 1 or 3[2]	Port 2 or 4[2]
10 MHz to 50 MHz[3]	74	82	85	93
50 MHz to 100 MHz[3]	93	98	102	110
100 MHz to 500 MHz[3]	98	103	109	117
500 MHz to 1 GHz	114	119	123	128
1 GHz to 2 GHz	118	123	125	130
2 GHz to 3.2 GHz	118	123	125	130
3.2 GHz to 10 GHz	123	123	131	131
10 GHz to 16 GHz	124	124	130	129
16 GHz to 20 GHz	124	124	129	130
20 GHz to 26.5 GHz	124	124	129	130
26.5 GHz to 30 GHz	120	120	129	129
30 GHz to 32 GHz	119	119	128	128
32 GHz to 35 GHz	120	120	129	129
35 GHz to 40 GHz	117	117	126	126
40 GHz to 43.5 GHz	118	118	126	126
43.5 GHz to 47 GHz	112	112	123	123
47 GHz to 50 GHz	99	99	112	112

[1] The system dynamic range is calculated as the difference between the noise floor and the specified source maximum output power. The effective dynamic range must take measurement uncertainties and interfering signals into account.

[2] Either port can be used as the source port. Any other port can be used as the receiver port.

[3] May typically be degraded at particular frequencies below 500 MHz due to spurious receiver residuals.

ООО "Техэнком" Контрольно-измерительные приборы и оборудование www.tehencom.com

Table 2b. System Dynamic Range at Test Port[1] - Option 219 or 419

Description	Specification (dB) at Test Port		Typical (dB) at Test Port	
	Port 1 or 3[2]	Port 2 or 4[2]	Port 1 or 3[2]	Port 2 or 4[2]
10 MHz to 50 MHz[3]	74	82	87	93
50 MHz to 100 MHz[3]	93	98	102	111
100 MHz to 500 MHz[3]	98	103	109	118
500 MHz to 1 GHz	114	119	125	130
1 GHz to 2 GHz	118	123	125	133
2 GHz to 3.2 GHz	118	123	128	132
3.2 GHz to 10 GHz	123	123	130	130
10 GHz to 16 GHz	122	122	127	127
16 GHz to 20 GHz	121	121	127	127
20 GHz to 26.5 GHz	121	121	127	127
26.5 GHz to 30 GHz	117	117	126	126
30 GHz to 32 GHz	115	115	124	124
32 GHz to 35 GHz	117	117	126	126
35 GHz to 40 GHz	112	112	121	121
40 GHz to 43.5 GHz	113	113	121	121
43.5 GHz to 47 GHz	106	106	118	118
47 GHz to 50 GHz	93	93	105	105

[1] The system dynamic range is calculated as the difference between the noise floor and the specified source maximum output power. The effective dynamic range must take measurement uncertainties and interfering signals into account.

[2] Either port can be used as the source port. Any other port can be used as the receiver port.

[3] May typically be degraded at particular frequencies below 500 MHz due to spurious receiver residuals.

ООО "Техэнком" Контрольно-измерительные приборы и оборудование www.tehencom.com

Table 2c. System Dynamic Range at Test Port[1] - Option 224

Description	Specification (dB) at Test Port		Typical (dB) at Test Port	
	Source 2 Out 1	Source 2 Out 2	Source 2 Out 1	Source 2 Out 2
10 MHz to 50 MHz[2]	74	83	86	93
50 MHz to 100 MHz[2]	93	100	102	110
100 MHz to 500 MHz[2]	98	105	109	117
500 MHz to 1 GHz	114	119	123	129
1 GHz to 2 GHz	118	123	125	131
2 GHz to 3.2 GHz	118	123	125	131
3.2 GHz to 10 GHz	124	126	132	133
10 GHz to 16 GHz	123	124	130	130
16 GHz to 20 GHz	125	125	132	132
20 GHz to 26.5 GHz	125	125	132	132
26.5 GHz to 30 GHz	122	122	131	132
30 GHz to 32 GHz	121	122	130	132
32 GHz to 35 GHz	122	122	131	132
35 GHz to 40 GHz	119	120	128	128
40 GHz to 43.5 GHz	120	121	128	128
43.5 GHz to 47 GHz	114	115	126	126
47 GHz to 50 GHz	102	102	115	118

[1] The system dynamic range is calculated as the difference between the noise floor and the specified source maximum output power. The effective dynamic range must take measurement uncertainties and interfering signals into account.

[2] May typically be degraded at particular frequencies below 500 MHz due to spurious receiver residuals.

Table 2d. System Dynamic Range at Test Port[1] - Option 224 or 423

Description	Specification (dB) at Test Port		Typical (dB) at Test Port			
	Port 1 or 3[2]	Port 2 or 4[2]	Port 1 or 3[2]	Port 2 or 4[2]	Source1-Port1 Combine Mode	Source 2-Port1 Combine Mode
10 MHz to 50 MHz[3]	74	80	87	95	80	81
50 MHz to 100 MHz[3]	93	98	102	110	95	95
100 MHz to 500 MHz[3]	98	103	109	117	102	102
500 MHz to 1 GHz	114	119	122	128	116	116
1 GHz to 2 GHz	118	123	124	130	118	118
2 GHz to 3.2 GHz	118	123	124	130	118	118
3.2 GHz to 10 GHz	123	123	130	130	122	121
10 GHz to 16 GHz	122	122	127	127	118	118
16 GHz to 20 GHz	121	121	127	127	116	116
20 GHz to 26.5 GHz	121	121	127	127	116	116
26.5 GHz to 30 GHz	117	117	126	126	114	113
30 GHz to 32 GHz	115	115	124	124	114	113
32 GHz to 35 GHz	117	117	126	126	114	113
35 GHz to 40 GHz	112	112	121	121	109	108
40 GHz to 43.5 GHz	113	113	121	121	109	108
43.5 GHz to 47 GHz	105	105	117	118	105	103
47 GHz to 50 GHz	92	92	106	107	93	89

[1] The system dynamic range is calculated as the difference between the noise floor and the specified source maximum output power. The effective dynamic range must take measurement uncertainties and interfering signals into account.

[2] Either port can be used as the source port. Any other port can be used as the receiver port.

[3] May typically be degraded at particular frequencies below 500 MHz due to spurious receiver residuals.

Table 3a. Extended Dynamic Range at Direct Receiver Access Input[1] - Option 200 or 400

Description	Specification (dB) at Direct Receiver Access Input	
	Port 1 or 3[2]	Port 2 or 4[2]
10 MHz to 50 MHz[3]	109	117
50 MHz to 100 MHz[3]	113	118
100 MHz to 500 MHz[3]	118	123
500 MHz to 1 GHz	135	140
1 GHz to 2 GHz	138	143
2 GHz to 3.2 GHz	130	135
3.2 GHz to 10 GHz	135	135
10 GHz to 16 GHz	136	136
16 GHz to 20 GHz	136	136
20 GHz to 26.5 GHz	134	134
26.5 GHz to 30 GHz	130	130
30 GHz to 32 GHz	129	129
32 GHz to 35 GHz	130	130
35 GHz to 40 GHz	127	127
40 GHz to 43.5 GHz	126	126
43.5 GHz to 47 GHz	120	120
47 GHz to 50 GHz	107	107

[1] The direct receiver access input extended dynamic range is calculated as the difference between the direct receiver access input noise floor and the source maximum output power. The effective dynamic range must take measurement uncertainties and interfering signals into account. This set-up should only be used when the receiver input will never exceed its maximum receiver input. When the analyzer is in segment sweep mode, it can have predefined frequency segments which will output a higher power level when the extended dynamic range is required (i.e. devices with high insertion loss), and reduced power when the maximum receiver input level will occur (i.e. devices with low insertion loss). The extended range is only available in one-path transmission measurements.

[2] Either port can be used as the source port. Any other port can be used as the receiver port.

[3] May typically be degraded at particular frequencies below 500 MHz due to spurious receiver residuals.

Table 3b. Extended Dynamic Range at Direct Receiver Access Input[1] - Option 219 or 419

Description	Specification (dB) at Direct Receiver Access Input	
	Port 1 or 3[2]	Port 2 or 4[2]
10 MHz to 50 MHz[3]	109	117
50 MHz to 100 MHz[3]	113	118
100 MHz to 500 MHz[3]	118	123
500 MHz to 1 GHz	135	140
1 GHz to 2 GHz	138	143
2 GHz to 3.2 GHz	130	135
3.2 GHz to 10 GHz	135	135
10 GHz to 16 GHz	134	134
16 GHz to 20 GHz	133	133
20 GHz to 26.5 GHz	131	131
26.5 GHz to 30 GHz	127	127
30 GHz to 32 GHz	125	125
32 GHz to 35 GHz	127	127
35 GHz to 40 GHz	122	122
40 GHz to 43.5 GHz	121	121
43.5 GHz to 47 GHz	114	114
47 GHz to 50 GHz	101	101

[1] The direct receiver access input extended dynamic range is calculated as the difference between the direct receiver access input noise floor and the source maximum output power. The effective dynamic range must take measurement uncertainties and interfering signals into account. This set-up should only be used when the receiver input will never exceed its maximum receiver input. When the analyzer is in segment sweep mode, it can have predefined frequency segments which will output a higher power level when the extended dynamic range is required (i.e. devices with high insertion loss), and reduced power when the maximum receiver input level will occur (i.e. devices with low insertion loss). The extended range is only available in one-path transmission measurements.

[2] Either port can be used as the source port. Any other port can be used as the receiver port.

[3] May typically be degraded at particular frequencies below 500 MHz due to spurious receiver residuals.

ООО "Техэнком" Контрольно-измерительные приборы и оборудование www.tehencom.com

Table 3c. Extended Dynamic Range at Direct Receiver Access Input[1] - Option 224

Description	Specification (dB) at Direct Receiver Access Input	
	Source 2 Out 1	Source 2 Out 2
10 MHz to 50 MHz[2]	109	118
50 MHz to 100 MHz[2]	113	120
100 MHz to 500 MHz[2]	118	125
500 MHz to 1 GHz	135	140
1 GHz to 2 GHz	138	143
2 GHz to 3.2 GHz	130	135
3.2 GHz to 10 GHz	136	138
10 GHz to 16 GHz	135	136
16 GHz to 20 GHz	137	137
20 GHz to 26.5 GHz	135	135
26.5 GHz to 30 GHz	132	132
30 GHz to 32 GHz	131	132
32 GHz to 35 GHz	132	132
35 GHz to 40 GHz	129	130
40 GHz to 43.5 GHz	128	129
43.5 GHz to 47 GHz	122	123
47 GHz to 50 GHz	110	110

[1] The direct receiver access input extended dynamic range is calculated as the difference between the direct receiver access input noise floor and the source maximum output power. The effective dynamic range must take measurement uncertainties and interfering signals into account. This set-up should only be used when the receiver input will never exceed its compression or damage level. When the analyzer is in segment sweep mode, it can have predefined frequency segments which will output a higher power level when the extended dynamic range is required (i.e. devices with high insertion loss), and reduced power when receiver compression or damage may occur (i.e. devices with low insertion loss). The extended range is only available in one-path transmission measurements.

[2] May typically be degraded at particular frequencies below 500 MHz due to spurious receiver residuals.

Table 3d. Extended Dynamic Range at Direct Receiver Access Input[1] - Option 224 or 423

Description	Specification (dB) at Direct Receiver Access Input			
	Port 1 or 3[2]	Port 2 or 4[2]	Source 1, Port 1 Combine Mode	Source 2, Port 1 Combine Mode
10 MHz to 50 MHz[3]	109	115	115	116
50 MHz to 100 MHz[3]	113	118	115	115
100 MHz to 500 MHz[3]	118	123	122	122
500 MHz to 1 GHz	135	140	137	137
1 GHz to 2 GHz	138	143	138	138
2 GHz to 3.2 GHz	130	135	130	130
3.2 GHz to 10 GHz	135	135	134	133
10 GHz to 16 GHz	134	134	130	130
16 GHz to 20 GHz	133	133	128	128
20 GHz to 26.5 GHz	131	131	126	126
26.5 GHz to 30 GHz	127	127	124	123
30 GHz to 32 GHz	125	125	124	123
32 GHz to 35 GHz	127	127	124	123
35 GHz to 40 GHz	122	122	119	118
40 GHz to 43.5 GHz	121	121	117	116
43.5 GHz to 47 GHz	113	113	113	111
47 GHz to 50 GHz	100	100	101	97

[1] The direct receiver access input extended dynamic range is calculated as the difference between the direct receiver access input noise floor and the source maximum output power. The effective dynamic range must take measurement uncertainties and interfering signals into account. This set-up should only be used when the receiver input will never exceed its compression or damage level. When the analyzer is in segment sweep mode, it can have predefined frequency segments which will output a higher power level when the extended dynamic range is required (i.e. devices with high insertion loss), and reduced power when receiver compression or damage may occur (i.e. devices with low insertion loss). The extended range is only available in one-path transmission measurements.

[2] Either port can be used as the source port. Any other port can be used as the receiver port.

[3] May typically be degraded at particular frequencies below 500 MHz due to spurious receiver residuals.

N5244A and N5245A Corrected System Performance - All Options

Note: For any Sii reflection measurement:

- Sjj = 0.

For any Sij transmission measurement:

- Sji = Sij when Sij ≤ 1
- Sji = 1/Sij when Sij > 1
- Skk = 0 for all k

Table 4. 85056A Calibration Kit

N5244A and N5245A All Options

Applies to the N5244A and N5245A Option 200 or 219 or 224 or 400 or 419 or 423 analyzers, 85056A (2.4 mm) calibration kit, 85131F flexible test port cable set, and a full 2-port calibration. Also applies to the following condition:

Environmental temperature 23° ±3 °C, with < 1 °C deviation from calibration temperature

Description	Specification (dB)				
	50 MHz to 500 MHz	500 MHz to 2 GHz	2 GHz to 26.5 GHz	26.5 GHz to 43.5 GHz	43.5 GHz to 50 GHz
Directivity	42	42	38	36	36
Source Match	41	41	33	31	31
Load Match	42	42	37	35	35
Reflection Tracking [1]					
Mag	±0.001	±0.001	±0.020	±0.027	±0.027
Phase	+0.009/°C	0.009/°C	0.133/°C	0.180/°C	0.180/°C
Transmission Tracking [1]					
Mag	±0.020	±0.024	±0.093	±0.174	±0.182
Phase	+0.135/°C	+0.155/°C	+0.615/°C	+1.148/°C	1.202/°C

[1]Temperature deviation is a characteristic value.

Transmission Uncertainty

The following charts were generated for Option 423, although they are applicable for any option.

N5244A Opt 423 with 85056A

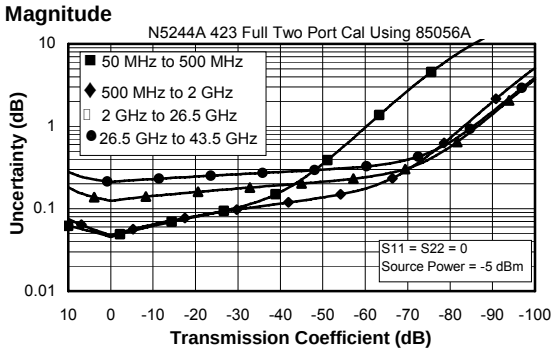

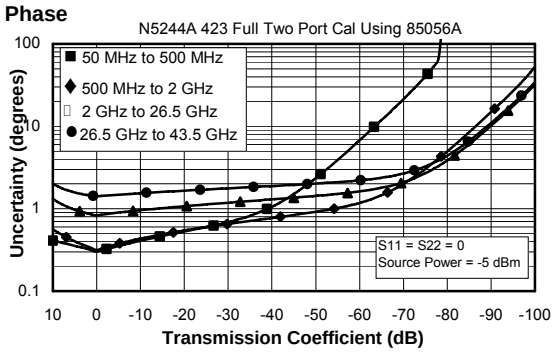

N5245A Opt 423 with 85056A

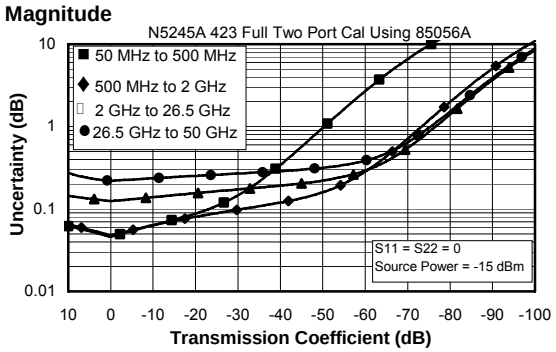

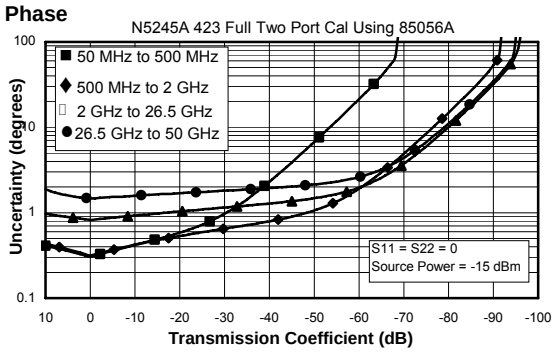

Reflection Uncertainty

The following charts were generated for Option 423, although they are applicable for any option.

N5244A Opt 423 with 85056A

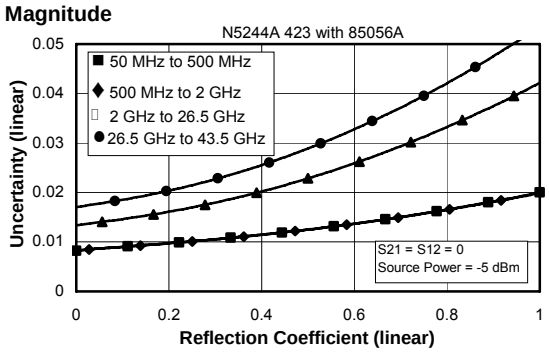

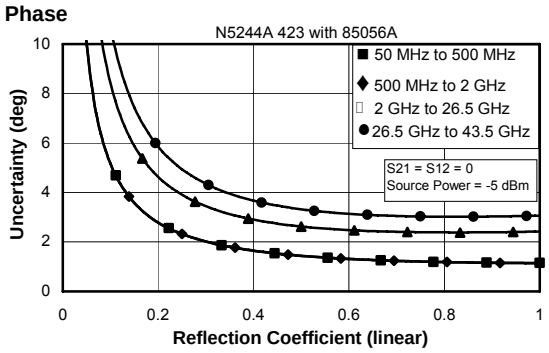

N5245A Opt 423 with 85056A

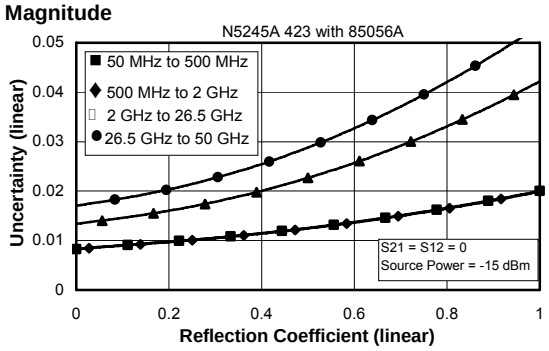

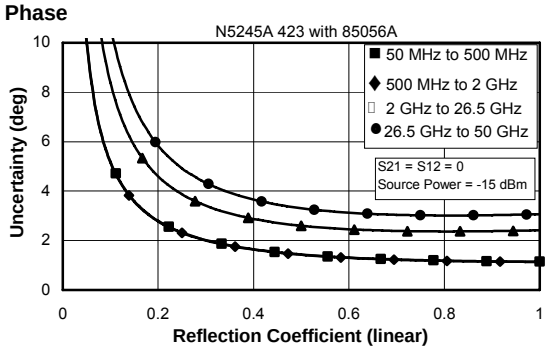

ООО "Техэнком" Контрольно-измерительные приборы и оборудование www.tehencom.com

Table 5. N4693A 4-Port Electronic Calibration Module

N5244A and N5245A All Options

Note: Uncertainty curves for the N4693A are created using a 2-port calibration. Multiport uncertainties are not supported at this time.

Applies to the N5244A and N5245A Option 200 or 219 or 224 or 400 or 419 or 423 analyzers, N4693A (2.4 mm) electronic calibration module, 85131F flexible test port cable set, and a full 2-port calibration. Also applies to the following condition:

Environmental temperature 23° ±3 °C, with < 1 °C deviation from calibration temperature

Description	Specification (dB)				
	50 MHz to 500 MHz	500 MHz to 2 GHz	2 GHz to 26.5 GHz	26.5 GHz to 43.5 GHz	43.5 GHz to 50 GHz
Directivity	32	55	45	41	41
Source Match	25	46	37	30	30
Load Match	25	45	36	29	29
Reflection Tracking [1]					
Mag	±0.050	±0.030	±0.050	±0.080	±0.080
Phase	0.330/°C	0.198/°C	0.330/°C	0.528/°C	0.528/°C
Transmission Tracking [1]					
Mag	±0.084	±0.033	±0.065	±0.114	±0.114
Phase	0.556/°C	0.218/°C	0.431/°C	0.754/°C	0.754/°C

[1] Temperature deviation is a characteristic value.

Transmission Uncertainty

The following charts were generated for Option 423, although they are applicable for any option.

N5244A Opt 423 with N4693A

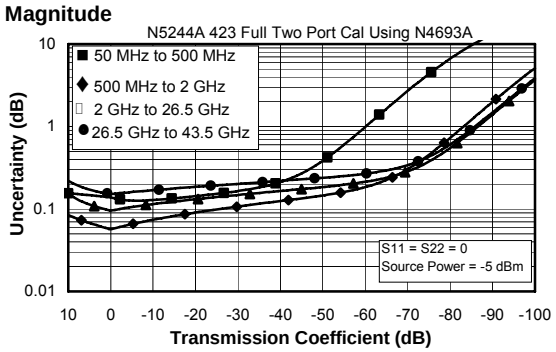

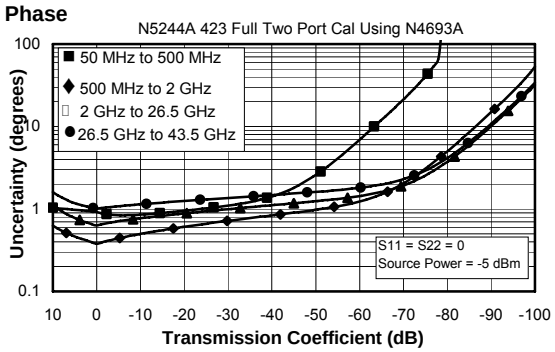

N5245A Opt 423 with N4693A

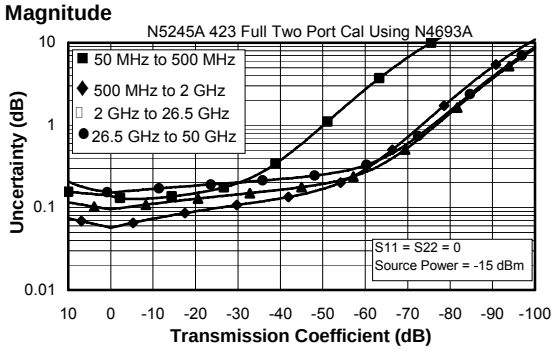

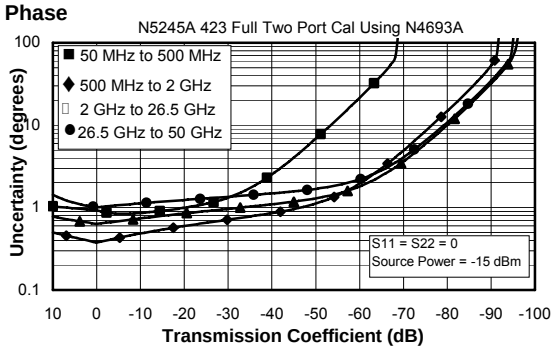

Reflection Uncertainty

The following charts were generated for Option 423, although they are applicable for any option.

N5244A Opt 423 with N4693A

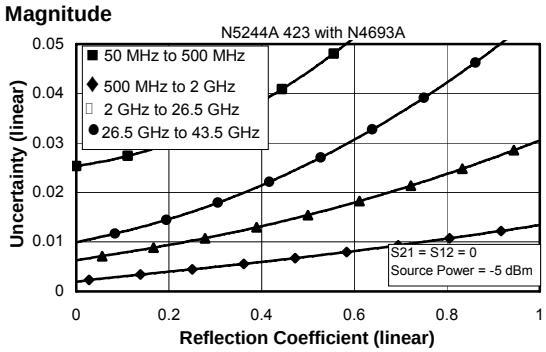

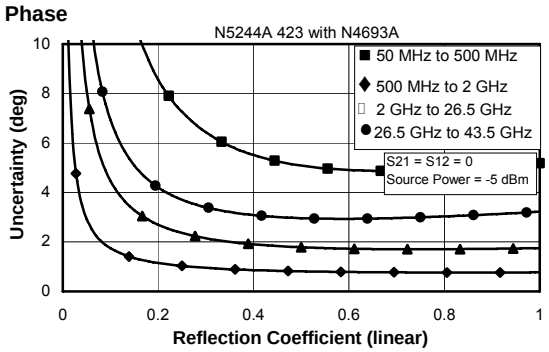

N5245A Opt 423 with N4693A

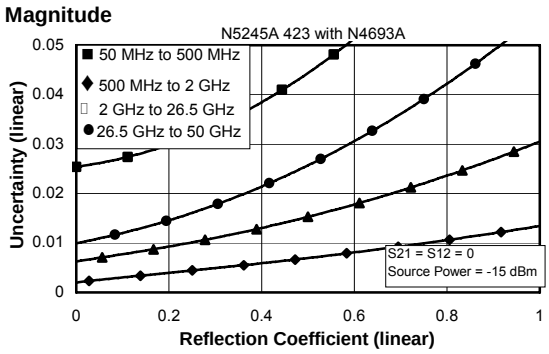

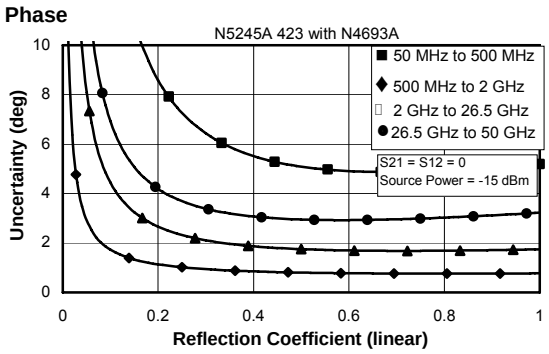

ООО "Техэнком" Контрольно-измерительные приборы и оборудование www.tehencom.com

Uncorrected System Performance

Table 6. Error Terms[1]

Ports 1, 2, 3, 4 - All Options

Directivity (dB)	Specification	Typical
10 MHz to 50 MHz	18	21
50 MHz to 200 MHz	22	27
200 MHz to 500 MHz	23	27
500 MHz to 3.2 GHz	23	30
3.2 GHz to 10 GHz	22	25
10 GHz to 13.5 GHz	18	23
13.5 GHz to 16 GHz	18	21
16 GHz to 20 GHz	18	20
20 GHz to 24 GHz	16	20
24 GHz to 26.5 GHz	16	22
26.5 GHz to 43.5 GHz	16	21
43.5 GHz to 46 GHz	15	21
46 GHz to 50 GHz	15	19

Table 6. (Continued) Error Terms[1]

Source Match (dB)	Specification	Typical
10 MHz to 50 MHz	10	13
50 MHz to 500 MHz	18	27
500 MHz to 3.2 GHz	16	21
3.2 GHz to 10 GHz	14	20
10 GHz to 13.5 GHz	12	17
13.5 GHz to 16 GHz	12	17
16 GHz to 20 GHz	12	18
20 GHz to 24 GHz	11	16
24 GHz to 26.5 GHz	11	17
26.5 GHz to 43.5 GHz	7	12
43.5 GHz to 46 GHz	7	13
46 GHz to 50 GHz	6	11
Load Match (dB)	**Specification**	**Typical**
10 MHz to 50 MHz	10	15
50 MHz to 500 MHz	16	22
500 MHz to 3.2 GHz	14	18
3.2 GHz to 10 GHz	13	17
10 GHz to 13.5 GHz	11	16
13.5 GHz to 16 GHz	11	15
16 GHz to 20 GHz	11	16
20 GHz to 24 GHz	10	16
24 GHz to 26.5 GHz	10	16
26.5 GHz to 43.5 GHz	7	12
43.5 GHz to 46 GHz	7	12
46 GHz to 50 GHz	7	11

Table 6. (Continued) Error Terms[1]

Transmission Tracking[3] (dB)	Specification	Typical
10 MHz to 43.5 GHz	--	+/-1.5
43.5 GHz to 50 GHz	--	+/-1.5

Reflection Tracking [2] (dB)	Specification	Typical
10 MHz to 43.5 GHz	--	+/-1.5
43.5 GHz to 50 GHz	--	+/-1.5

Crosstalk[3](dB)	Specification	Typical
10 MHz to 50 MHz	--	-82
50 MHz to 100 MHz	--	-85
100 MHz to 500 MHz	--	-110
500 MHz to 35 GHz	--	-120
35 GHz to 43.5 GHz	--	-115
43.5 GHz to 47 GHz	--	-105
47 GHz to 50 GHz	--	-100

[1] Specifications apply over environmental temperature of 25 °C ±5 °C, with less than 1°C variation from the calibration temperature.

[2] Cable loss not included.

[3] Measurement conditions: normalized to a thru, measured with shorts on all ports, 10 Hz IF bandwidth, averaging factor of 8, alternate mode, source power set to the lesser of the maximum power-out or the maximum receiver power.

Test Port Output

Table 7. Frequency Information - All Options

Description	Specification (dB)	Typical (dB)
N5244A Frequency Range	10 MHz to 43.5 GHz	--
N5245A Frequency Range	10 MHz to 50.0 GHz	--
Frequency Resolution	1 Hz	--
Frequency Accuracy	+/- 1 ppm	--
Frequency Stability	--	+/-0.05 ppm, -10° to 70° C[1] +/-0.1 ppm/yr maximum[2]

[1] Assumes no variation in time.
[2] Assumes no variation in temperature.

Table 8a. Maximum Leveled Power - Option 200 or 400

Description	Specification (dBm)			Typical (dBm)		
	Port 1 or 3[1] Filtered Mode[2] Figure 2 or Figure 5	**Port 1 or 3[1] Hi Pwr Mode[2]** Figure 3 or Figure 6	**Port 2 or 4[1]**	**Port 1 or 3[1] Filtered Mode[2]** Figure 2 or Figure 5	**Port 1 or 3[1] Hi Pwr Mode[2]** Figure 3 or Figure 6	**Port 2 or 4[1]**
10 MHz to 50 MHz	4	12	12	9	17	17
50 MHz to 500 MHz	8	13	13	11	18	19
500 MHz to 1 GHz	8	13	13	11	18	16
1 GHz to 2 GHz	8	13	13	11	16	16
2 GHz to 3.2 GHz	8	10	13	11	14	16
3.2 GHz to 10 GHz	13	13	13	17	17	17
10 GHz to 16 GHz	13	13	13	16	16	15
16 GHz to 26.5 GHz	13	13	13	15	15	16
26.5 GHz to 30 GHz	12	12	12	16	16	16
30 GHz to 32 GHz	11	11	11	15	15	15
32 GHz to 35 GHz	12	12	12	16	16	16
35 GHz to 43.5 GHz	9	9	9	13	13	13
43.5 GHz to 47 GHz	5	5	5	10	10	10
47 GHz to 50 GHz	-8	-8	-8	-1	-1	-1

[1] Either port can be used as the source port.

[2] In Filtered Mode, the signal path goes through filters to minimize harmonics below 3.2 GHz. In Hi Pwr Mode, the signal bypasses the filters to maximize output power.

Figure 1. Block Diagram, N5244A and N5245A Option 200

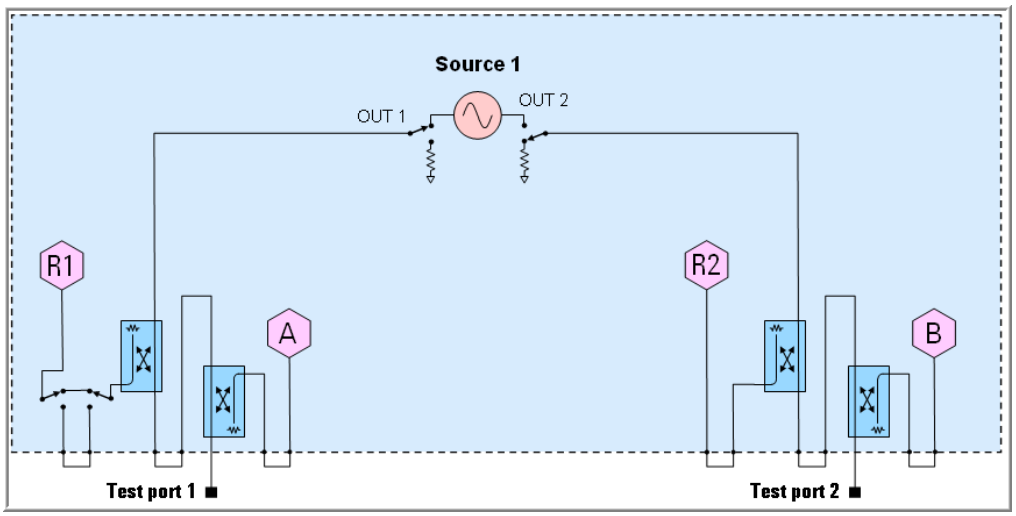

Figure 2. Path Configuration Diagram, N5244A and N5245A Option 200, Port 1 Filtered Mode

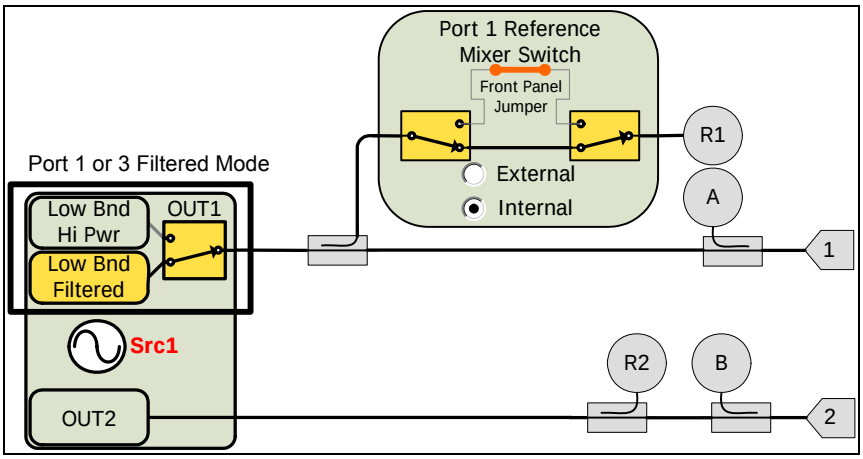

Figure 3. Path Configuration Diagram, N5244A and N5245A Option 200, Port 1 Hi Pwr Mode

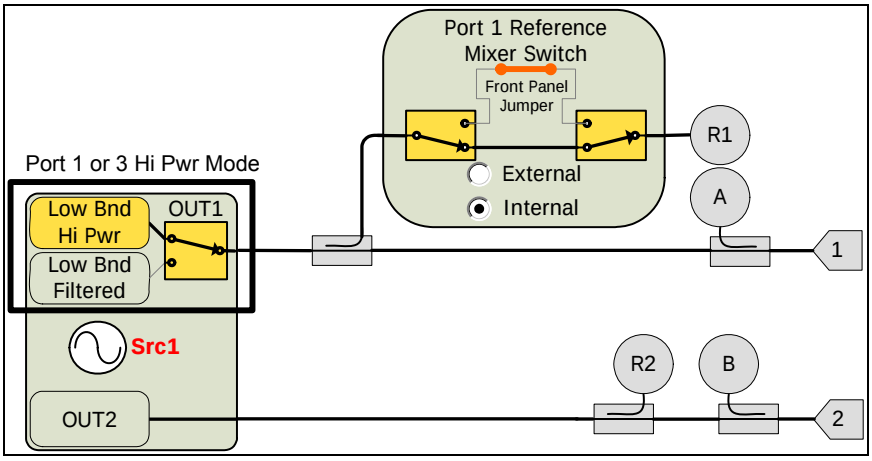

Figure 4. Block Diagram, N5244A and N5245A Option 400

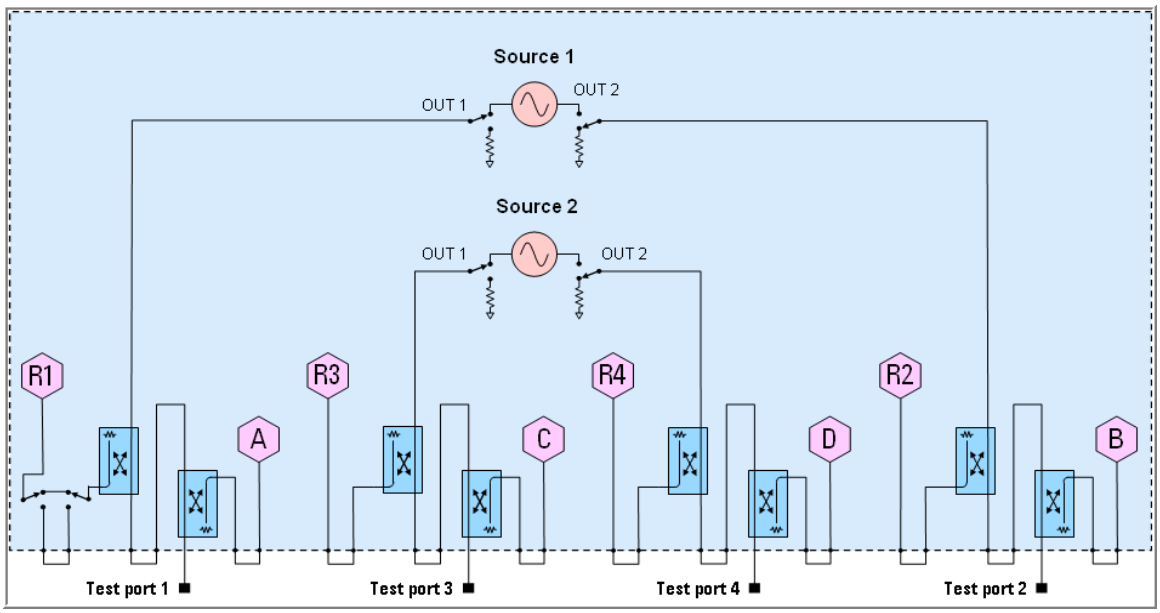

Figure 5. Path Configuration Diagram, N5244A and N5245A Option 400, Port 1 or 3 Filtered Mode

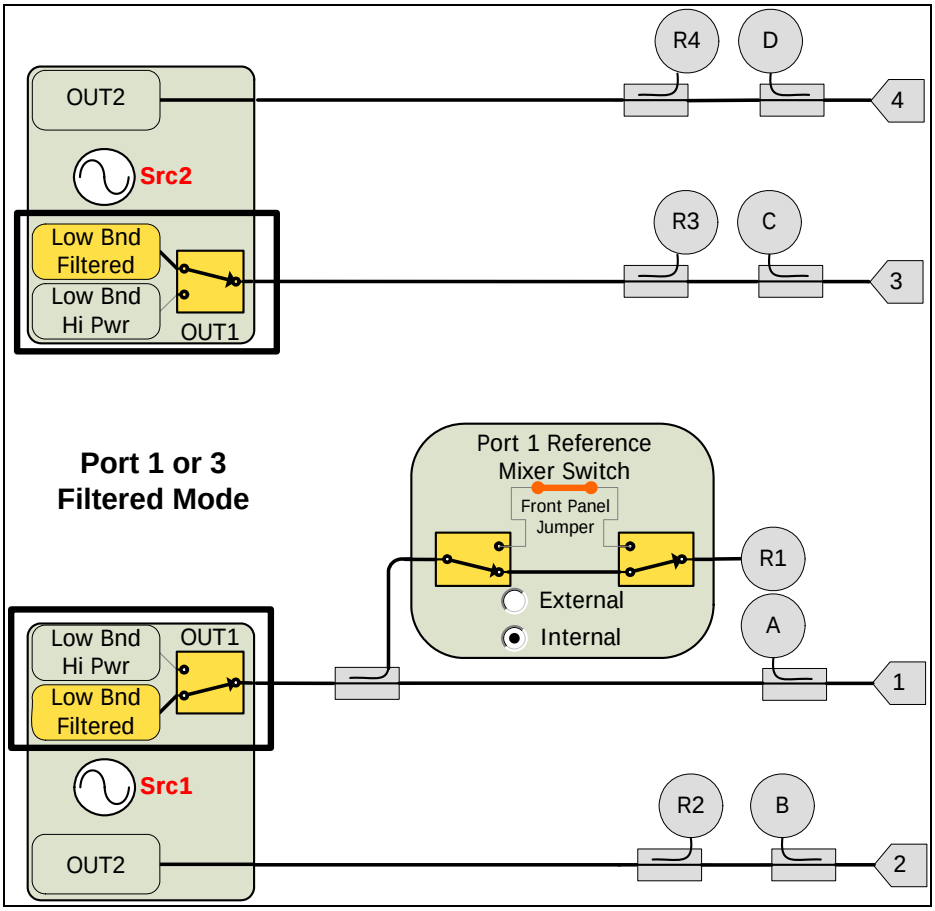

Figure 6. Path Configuration Diagram, N5244A and N5245A Option 400, Port 1 or 3 Hi Pwr Mode

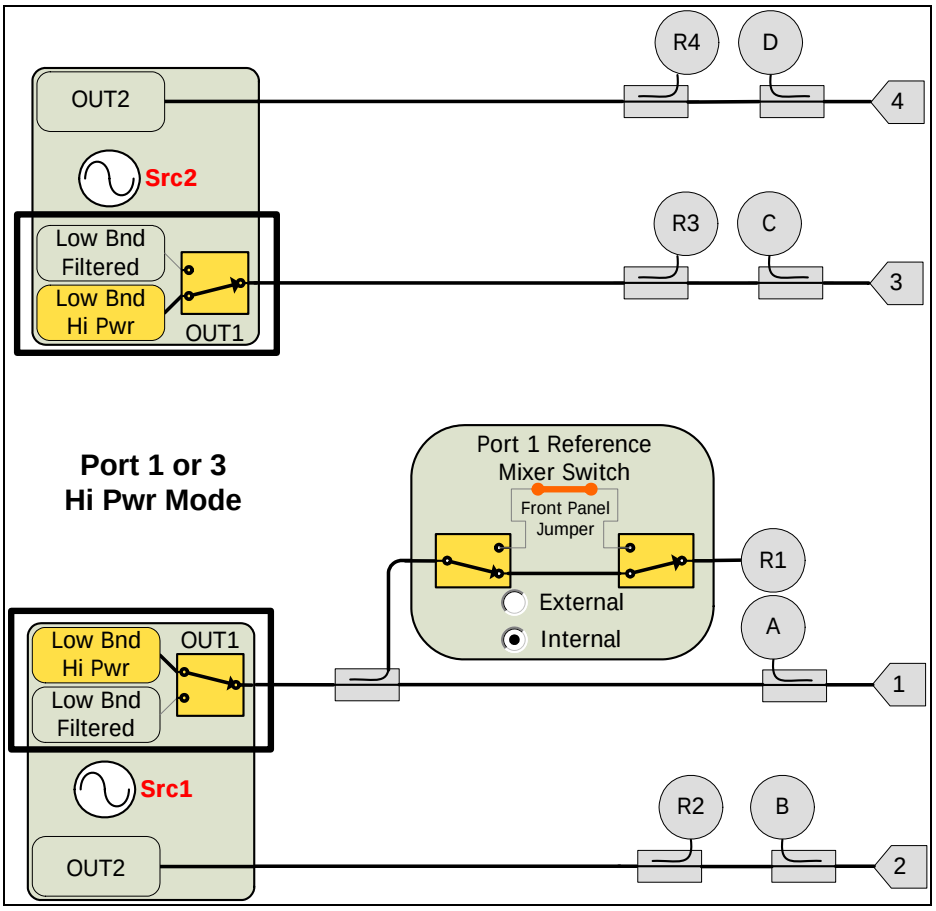

ООО "Техэнком" Контрольно-измерительные приборы и оборудование www.tehencom.com

Table 8b. Maximum Leveled Power - Option 219 or 419

Description	Specification (dBm)			Typical (dBm)		
	Port 1 or 3[1] Filtered Mode[2]	Port 1 or 3[1] Hi Pwr Mode[2]	Port 2 or 4[1]	Port 1 or 3[1] Filtered Mode[2]	Port 1 or 3[1] Hi Pwr Mode[2]	Port 2 or 4[1]
10 MHz to 50 MHz	4	9	12	11	19	17
50 MHz to 500 MHz	8	13	13	11	20	20
500 MHz to 1 GHz	8	13	13	13	18	18
1 GHz to 2 GHz	8	12	13	11	17	19
2 GHz to 3.2 GHz	8	10	13	14	15	18
3.2 GHz to 10 GHz	13	13	13	16	16	16
10 GHz to 16 GHz	11	11	11	13	13	13
16 GHz to 26.5 GHz	10	10	10	13	13	13
26.5 GHz to 30 GHz	9	9	9	13	13	13
30 GHz to 32 GHz	7	7	7	11	11	11
32 GHz to 35 GHz	9	9	9	13	13	13
35 GHz to 43.5 GHz	4	4	4	8	8	8
43.5 GHz to 47 GHz	-1	-1	-1	5	5	5
47 GHz to 50 GHz	-14	-14	-14	-8	-8	-8

[1] Either port can be used as the source port.

[2] In Filtered Mode, the signal path goes through filters to minimize harmonics below 3.2 GHz. In Hi Pwr Mode, the signal bypasses the filters to maximize output power.

Figure 7. Block Diagram, N5244A and N5245A Option 219

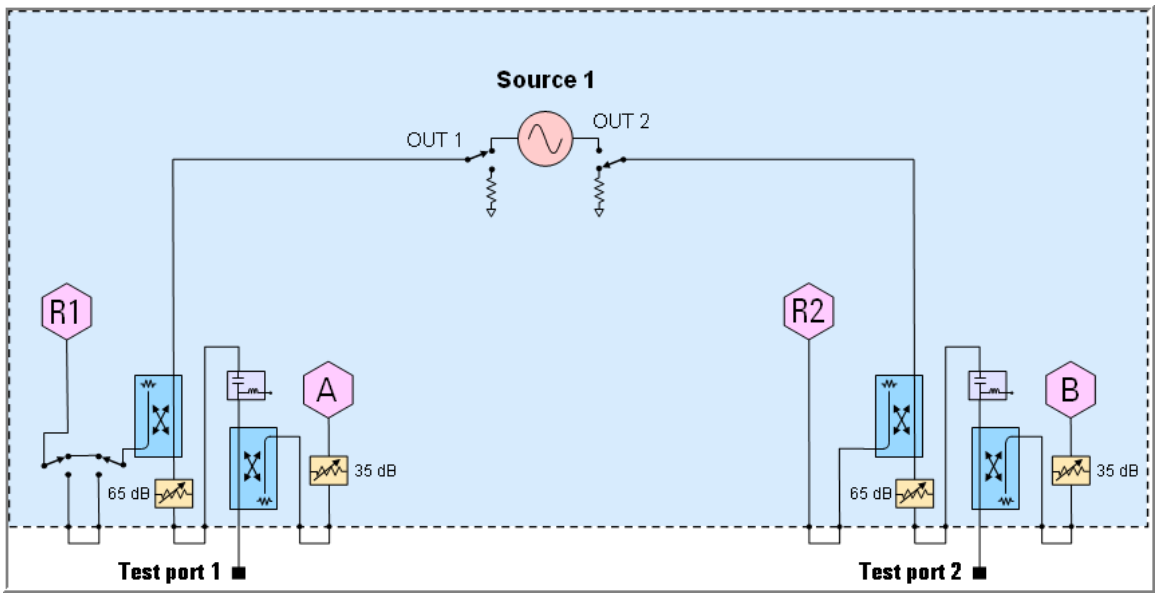

Note: The path configuration drawing for Option 219 is identical to the path configuration drawings for Option 200, which are shown in Figure 2 and Figure 3.

Figure 8. Block Diagram, N5244A and N5245A Option 419

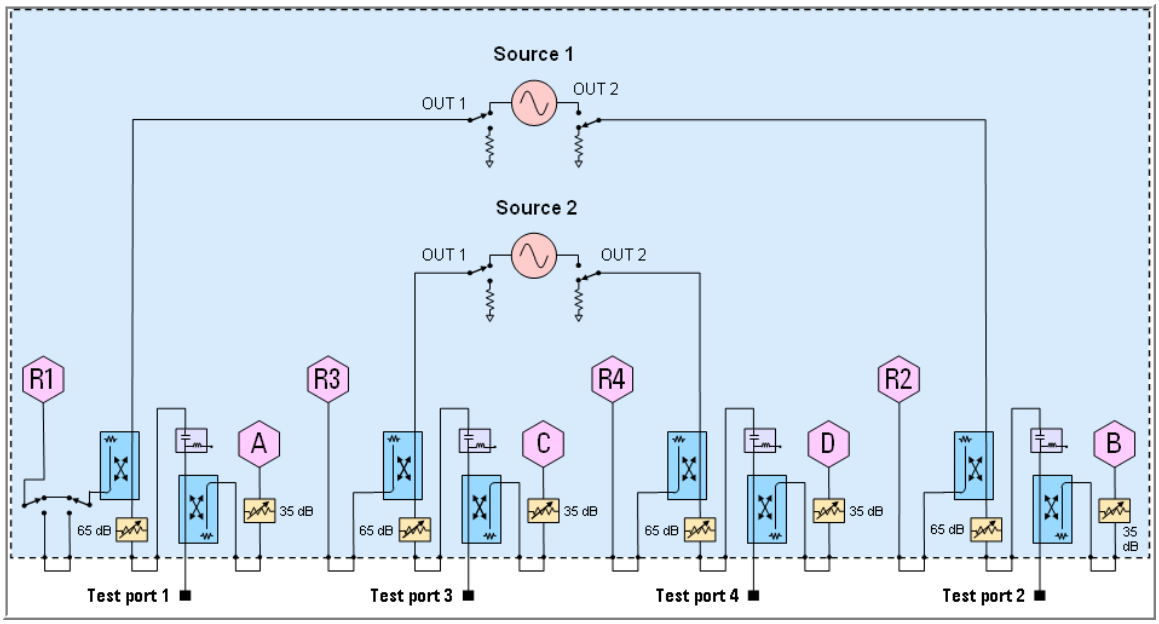

Note: The path configuration drawing for Option 419 is identical to the path configuration drawings for Option 400, which are shown in Figure 5 and Figure 6.

ООО "Техэнком" Контрольно-измерительные приборы и оборудование www.tehencom.com

Table 8c. Maximum Leveled Power - Option 224 - Source 1

Description	Specification (dBm)			Typical (dBm)		
	Port 1 Filtered Mode[1]	Port 1 Hi Pwr Mode[1]	Port 2	Port 1 Filtered Mode[1]	Port 1 Hi Pwr Mode[1]	Port 2
10 MHz to 50 MHz	4	11	10	11	18	19
50 MHz to 500 MHz	8	13	13	11	18	19
500 MHz to 1 GHz	8	13	13	10	18	16
1 GHz to 2 GHz	8	13	13	10	16	16
2 GHz to 3.2 GHz	8	10	13	10	13	16
3.2 GHz to 10 GHz	13	13	13	16	16	16
10 GHz to 16 GHz	11	11	11	13	13	13
16 GHz to 26.5 GHz	10	10	10	13	13	13
26.5 GHz to 30 GHz	9	9	9	13	13	13
30 GHz to 32 GHz	7	7	7	11	11	11
32 GHz to 35 GHz	9	9	9	13	13	13
35 GHz to 43.5 GHz	4	4	4	8	8	8
43.5 GHz to 47 GHz	-2	-2	-2	4	4	5
47 GHz to 50 GHz	-15	-15	-15	-7	-7	-6

[1] In Filtered Mode, the signal path goes through filters to minimize harmonics below 3.2 GHz. In Hi Pwr Mode, the signal bypasses the filters to maximize output power.

ООО "Техэнком" Контрольно-измерительные приборы и оборудование www.tehencom.com

Table 8d. Maximum Leveled Power - Option 224 - Source 2

Description	Specification (dBm)			Typical (dBm)		
	Source 2, Out 1 Filtered Mode[1]	Source 2, Out 1 Hi Pwr Mode[1]	Source 2 Out 2	Source 2 Out 1 Filtered Mode[1]	Source 2 Out 1 Hi Pwr Mode[1]	Source 2 Out 2
10 MHz to 50 MHz	4	13	13	10	18	17
50 MHz to 500 MHz	8	18	15	11	20	19
500 MHz to 1 GHz	8	16	13	11	19	17
1 GHz to 2 GHz	8	13	13	11	17	17
2 GHz to 3.2 GHz	8	11	13	11	14	17
3.2 GHz to 10 GHz	14	14	16	18	18	19
10 GHz to 16 GHz	12	12	13	16	16	16
16 GHz to 26.5 GHz	14	14	14	18	18	18
26.5 GHz to 30 GHz	14	14	14	18	18	19
30 GHz to 32 GHz	13	13	14	17	17	19
32 GHz to 35 GHz	14	14	14	18	18	19
35 GHz to 43.5 GHz	11	11	12	15	15	15
43.5 GHz to 47 GHz	7	7	8	13	13	13
47 GHz to 50 GHz	-5	-5	-5	2	2	5

[1] In Filtered Mode, the signal path goes through filters to minimize harmonics below 3.2 GHz. In Hi Pwr Mode, the signal bypasses the filters to maximize output power.

Figure 9. Block Diagram: N5244A and N5245A Option 224

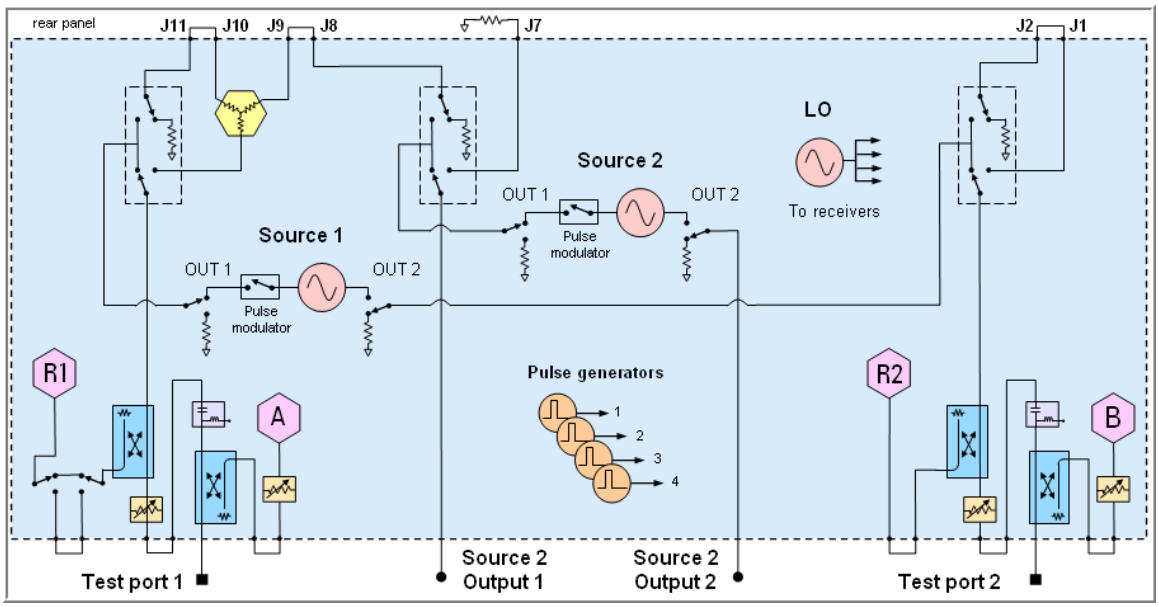

Figure 10. Path Configuration Diagram, N5244A and N5245A Option 224

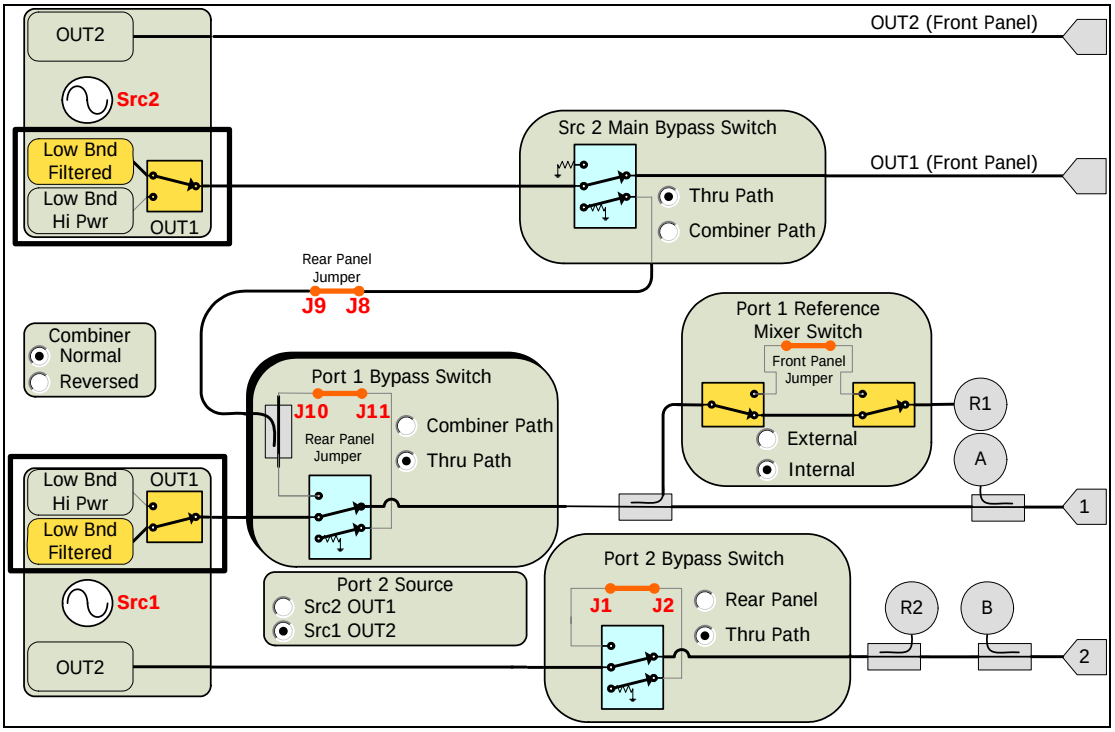

ООО "Техэнком" Контрольно-измерительные приборы и оборудование www.tehencom.com

Table 8e. Maximum Leveled Power - Option 423

Description	Specification (dBm)			Typical (dBm)		
	Port 1 or 3[1] Filtered Mode[2]	Port 1 or 3[1] Hi Pwr Mode[2]	Port 2 or 4[1]	Port 1 or 3[1] Filtered Mode[2]	Port 1 or 3[1] Hi Pwr Mode[2]	Port 2 or 4[1]
10 MHz to 50 MHz	4	11	10	11	18	19
50 MHz to 500 MHz	8	13	13	11	18	19
500 MHz to 1 GHz	8	13	13	10	18	16
1 GHz to 2 GHz	8	13	13	10	16	16
2 GHz to 3.2 GHz	8	10	13	10	13	16
3.2 GHz to 10 GHz	13	13	13	16	16	16
10 GHz to 16 GHz	11	11	11	13	13	13
16 GHz to 26.5 GHz	10	10	10	13	13	13
26.5 GHz to 30 GHz	9	9	9	13	13	13
30 GHz to 32 GHz	7	7	7	11	11	11
32 GHz to 35 GHz	9	9	9	13	13	13
35 GHz to 43.5 GHz	4	4	4	8	8	8
43.5 GHz to 47 GHz	-2	-2	-2	4	4	5
47 GHz to 50 GHz	-15	-15	-15	-7	-7	-6

[1] Either port can be used as the source port.

[2] In Filtered Mode, the signal path goes through filters to minimize harmonics below 3.2 GHz. In Hi Pwr Mode, the signal bypasses the filters to maximize output power.

ООО "Техэнком" Контрольно-измерительные приборы и оборудование www.tehencom.com

Table 8f. Maximum Leveled Power - Option 224 or 423

Description	Typical (dBm)			
	Source 1, Port 1 Combine Mode Filtered Mode[1]	Source 1, Port 1 Combine Mode Hi Pwr Mode[1]	Source 2, Port 1 Combine Mode Filtered Mode[1]	Source 2, Port 1 Combine Mode Hi Pwr Mode[1]
10 MHz to 50 MHz	4	11	5	11
50 MHz to 500 MHz	4	11	4	11
500 MHz to 1 GHz	4	11	4	11
1 GHz to 2 GHz	4	9	4	8
2 GHz to 3.2 GHz	4	5	4	5
3.2 GHz to 10 GHz	8	8	7	7
10 GHz to 16 GHz	4	4	4	4
16 GHz to 26.5 GHz	2	2	2	2
26.5 GHz to 30 GHz	1	1	0	0
30 GHz to 32 GHz	1	1	0	0
32 GHz to 35 GHz	1	1	0	0
35 GHz to 43.5 GHz	-4	-4	-5	-5
43.5 GHz to 47 GHz	-8	-8	-10	-10
47 GHz to 50 GHz	-20	-20	-24	-24

[1] In Filtered Mode, the signal path goes through filters to minimize harmonics below 3.2 GHz. In Hi Pwr Mode, the signal bypasses the filters to maximize output power.

Figure 11. Block Diagram: N5244A and N5245A Option 423

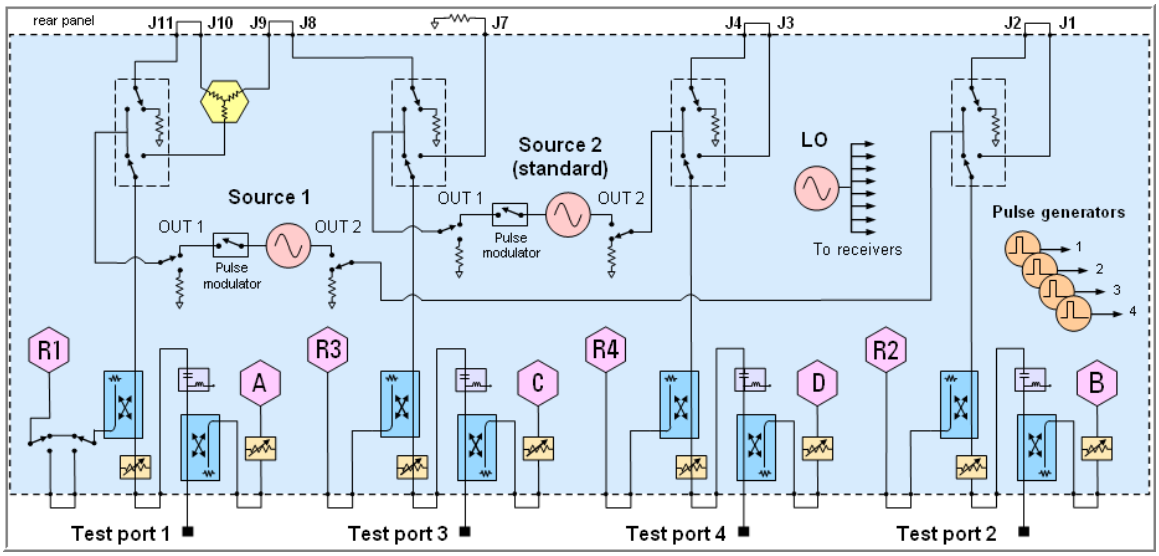

Figure 12. Path Configuration Diagram, N5244A and N5245A Option 423

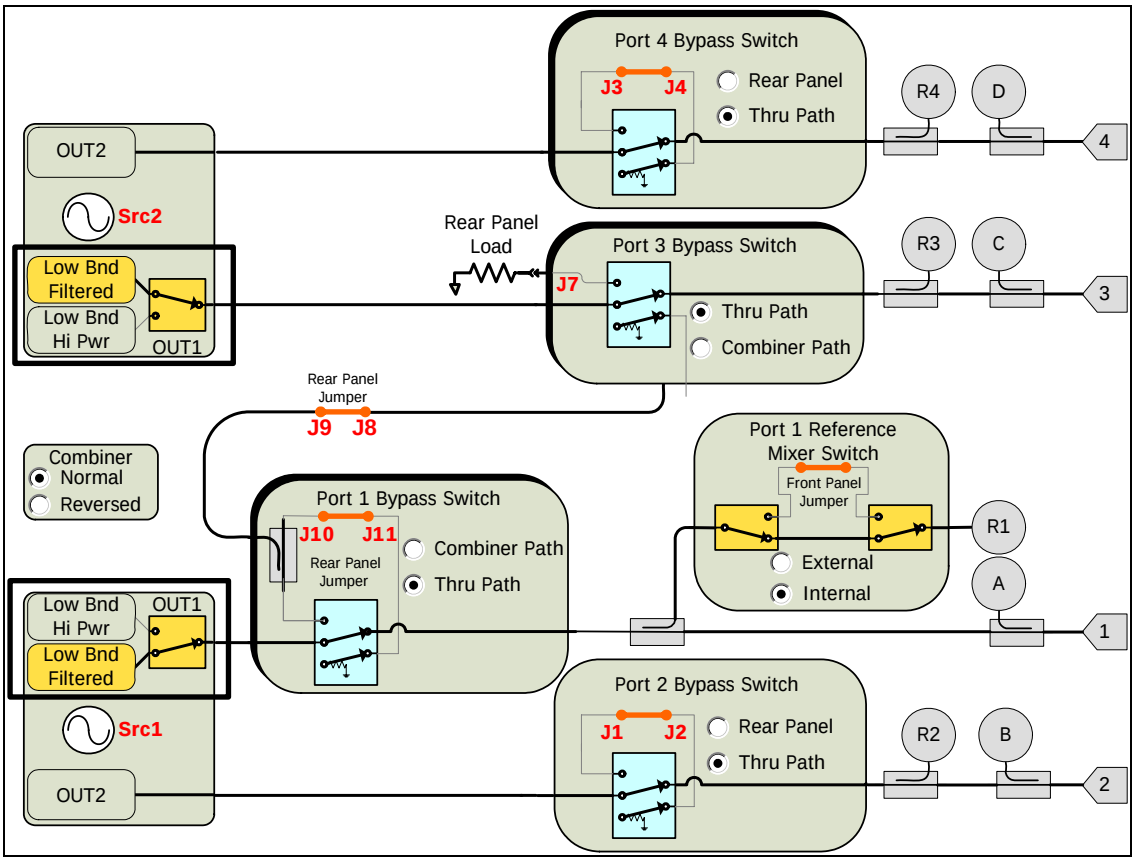

ООО "Техэнком" Контрольно-измерительные приборы и оборудование www.tehencom.com

Table 9a. Power Level Accuracy - All Options

Description	Specification (dB)		Typical (dB)	
	Ports 1, 2, 3, 4[1]	Source 2, Out 1 Source 2, Out 2	Ports 1, 2, 3, 4[1]	Source 2, Out 1 Source 2, Out 2
10 MHz to 50 MHz	+/- 1.0 dB	+/- 2.0 dB	+/- 0.27 dB	+/- 0.30 dB
50 MHz to 1 GHz	+/- 1.0 dB	+/- 2.0 dB	+/- 0.24 dB	+/- 0.26 dB
1 GHz to 3.2 GHz	+/- 1.2 dB	+/- 2.0 dB	+/- 0.33 dB	+/- 0.20 dB
3.2 GHz to 13.5 GHz	+/- 1.5 dB	+/- 2.0 dB	+/- 0.33 dB	+/- 0.20 dB
13.5 GHz to 20 GHz	+/- 1.5 dB	+/- 2.5 dB	+/- 0.36 dB	+/- 0.52 dB
20 GHz to 26.5 GHz	+/- 2.0 dB	+/- 2.5 dB	+/- 0.47 dB	+/- 0.44 dB
26.5 GHz to 43.5 GHz	+/- 3.0 dB	+/-3.5 dB	+/- 0.25 dB	+/- 0.27 dB
43.5 GHz to 50 GHz	+/- 3.5 dB	+/-3.5 dB	+/- 0.97 dB	+/- 0.82 dB

[1]Any port can be used as the source port. Source in filtered mode where applicable.

Table 9b. Power Level Linearity - All Options

Description	Specification (dB)		
	Port 1 or 3[1] -25dBm ≤ P<-20dBm	Port 1 or 3[1] -20dBm ≤ P<-15dBm	Port 1 or 3[1] P ≥-15dBm
10 MHz to 43.5 GHz	+/- 1.5 dB	+/- 1.5 dB	+/- 1.5 dB
43.5 GHz to 50 GHz	+/- 1.5 dB	+/- 1.5 dB	+/- 1.5 dB

[1] Either port can be used as the source port. Source in filtered mode.

Table 9c. Power Level Linearity - All Options

Description	Specification (dB)		
	Port 2 or 4[1] -25dBm ≤P<-20dBm	Port 2 or 4[1] -20dBm ≤P<-15dBm	Port 2 or 4[1] P ≥-15dBm
10 MHz to 50 MHz	+/- 2.0 dB	+/- 1.5 dB	+/- 1.5 dB
50 MHz to 43.5 GHz	+/- 2.0 dB	+/- 1.5 dB	+/- 1.5 dB
43.5 GHz to 50 GHz	+/- 2.0 dB	+/- 1.5 dB	+/- 1.5 dB

[1] Either port can be used as the source port.

ООО "Техэнком" Контрольно-измерительные приборы и оборудование www.tehencom.com

Table 9d. Power Level Linearity - Option 224

Description	Specification (dB)		
	Source 2, Out 1[1] P ≥-15dBm	Source 2, Out 2 -15dBm ≤P<-10dBm	Source 2, Out 2 P ≥-10dBm
10 MHz to 43.5 GHz	+/- 1.0 dB	+/- 1.0 dB	+/- 1.0 dB
43.5 GHz to 50 GHz	+/- 1.0 dB	+/- 1.0 dB	+/- 1.0 dB

[1]Source in filtered mode.

Table 10a. Power Sweep Range - Option 200 or 400

Description	Specification (dB)		Typical (dB)	
	Port 1 or 3[1]	Port 2 or 4[1]	Port 1 or 3[1]	Port 2 or 4[1]
10 MHz to 50 MHz	37	37	44	44
50 MHz to 500 MHz	38	38	45	46
500 MHz to 1 GHz	38	38	45	43
1 GHz to 2 GHz	38	38	43	43
2 GHz to 3.2 GHz	35	38	41	43
3.2 GHz to 10 GHz	38	38	44	44
10 GHz to 16 GHz	38	38	43	42
16 GHz to 26.5 GHz	38	38	42	43
26.5 GHz to 30 GHz	37	37	43	43
30 GHz to 32 GHz	36	36	42	42
32 GHz to 35 GHz	37	37	43	43
35 GHz to 43.5 GHz	34	34	40	40
43.5 GHz to 47 GHz	30	30	37	37
47 GHz to 50 GHz	17	17	26	26

[1] Either port can be used as the source port. Source in Hi Pwr mode where applicable.

Table 10b. Power Sweep Range - Option 219 or 419

Description	Specification (dB)		Typical (dB)	
	Port 1 or 3[1]	Port 2 or 4[1]	Port 1 or 3[1]	Port 2 or 4[1]
10 MHz to 50 MHz	34	37	46	44
50 MHz to 500 MHz	38	38	47	47
500 MHz to 1 GHz	38	38	45	45
1 GHz to 2 GHz	37	38	44	46
2 GHz to 3.2 GHz	35	38	42	45
3.2 GHz to 10 GHz	38	38	43	43
10 GHz to 16 GHz	36	36	40	40
16 GHz to 26.5 GHz	35	35	40	40
26.5 GHz to 30 GHz	34	34	40	40
30 GHz to 32 GHz	32	32	38	38
32 GHz to 35 GHz	34	34	40	40
35 GHz to 43.5 GHz	29	29	35	35
43.5 GHz to 47 GHz	24	24	32	32
47 GHz to 50 GHz	11	11	19	19

[1] Either port can be used as the source port. Source in Hi Pwr mode where applicable.

Table 10c. Power Sweep Range - Option 224 or 423

Description	Specification (dB)		Typical (dB)	
	Port 1 or 3[1]	Port 2 or 4[1]	Port 1 or 3[1]	Port 2 or 4[1]
10 MHz to 50 MHz	36	35	45	46
50 MHz to 500 MHz	38	38	45	46
500 MHz to 1 GHz	38	38	45	43
1 GHz to 2 GHz	38	38	43	43
2 GHz to 3.2 GHz	35	38	40	43
3.2 GHz to 10 GHz	38	38	43	43

ООО "Техэнком" Контрольно-измерительные приборы и оборудование www.tehencom.com

10 GHz to 16 GHz	36	36	40	40
16 GHz to 26.5 GHz	35	35	40	40
26.5 GHz to 30 GHz	34	34	40	40
30 GHz to 32 GHz	32	32	38	38
32 GHz to 35 GHz	34	34	40	40
35 GHz to 43.5 GHz	29	29	35	35
43.5 GHz to 47 GHz	23	23	31	32
47 GHz to 50 GHz	10	10	20	21

[1] Either port can be used as the source port. Source in Hi Pwr mode where applicable.

Table 10d. Power Sweep Range - Option 224

Description	Specification (dB)		Typical (dB)	
	Source 2[1] Out 1	Source 2 Out 2	Source 2[1] Out 1	Source 2 Out 2
10 MHz to 50 MHz	28	28	35	34
50 MHz to 500 MHz	33	30	37	36
500 MHz to 1 GHz	31	28	36	34
1 GHz to 2 GHz	28	28	34	34
2 GHz to 3.2 GHz	26	28	31	34
3.2 GHz to 10 GHz	29	31	35	36
10 GHz to 16 GHz	27	28	33	33
16 GHz to 26.5 GHz	29	29	35	35
26.5 GHz to 30 GHz	29	29	35	36
30 GHz to 32 GHz	28	29	34	36
32 GHz to 35 GHz	29	29	35	36
35 GHz to 43.5 GHz	26	27	32	32
43.5 GHz to 47 GHz	22	23	30	30
47 GHz to 50 GHz	10	10	19	22

[1]Source in Hi Pwr mode where applicable.

Table 11. Nominal Power (Preset Power)

	Specification (dBm)			Typical (dBm)	
	All Options	Option 224		Option 224 or 423	
	Ports 1, 2, 3, 4[1]	Source 2, Out 1	Source 2, Out 2	Source 1 Port 1 Combine Mode	Source 2 Port 1 Combine Mode
N5244A	-5 dBm	-5 dBm	-5 dBm	-15 dBm	-15 dBm
N5245A	-15 dBm	-5 dBm	-5 dBm	-25 dBm	-30 dBm

[1] Any port can be used as the source port. Any other port can be used as the receiver port.

Table 12. Power Resolution and Maximum/Minimum Settable Power

Description	Specification at Ports 1,2,3,4 [1]	Typical at Ports 1,2,3,4 [1]		
	All Options	All Options	Option 200 or 400	Option 219 or 419
Power Resolution	0.01 dB	--	--	--
Maximum Settable Power	--	30 dBm	--	--
Minimum Settable Power	--	--	-30 dBm	-95 dBm

[1] Any port can be used as the source port·

Table 13. Harmonics at Max Specified Power - All Options

See Table 8a. Maximum Leveled Power - Option 200 or 400 on page 25.

Description	Typical (dBc)	
2nd and 3rd Harmonics[4]	Port 1 or 3[1],[2] Source 2 Out 1[3]	Port 2 or 4[1] Source 2 Out 2
10 MHz to 2 GHz	-51	-13
2 GHz to 13.5 GHz	-60	-21
13.5 GHz to 43.5 GHz	-60	-60
43.5 GHz to 50 GHz	-60	-60

[1] Any port can be used as the source port.

[2] < 3.2 GHz Filtered Mode

[3] At port 1 max specified power.

[4] Listed frequency is fundamental frequency; test at max specified power

Table 14. Non-Harmonic Spurs at Nominal Power - All Options

Description Offset frequency = 30 kHz to 5 MHz	Typical (dBc) at Ports 1, 2, 3, 4 Source 2 Out 1, Source 2 Out 2
10 MHz to 500 MHz	-50
500 MHz to 1GHz	-60
1 GHz to 2 GHz	-60
2 GHz to 4 GHz	-57
4 GHz to 8 GHz	-51
8 GHz to 16 GHz	-45
16 GHz to 24 GHz	-39
24 GHz to 26.5 GHz	-39
26.5 GHz to 32 GHz	-39
32 GHz to 43.5 GHz	-31
43.5 GHz to 50 GHz	-31

Table 15. Phase Noise - All Options

Description	Typical (dBc/Hz) Ports 1, 2, 3, 4, Source 2 Out 1, Source 2 Out 2			
	1 kHz Offset	10 kHz Offset	100 kHz Offset	1 MHz Offset
10 MHz to 500 MHz	-85	-85	-85	-120
500 MHz to 1 GHz	-105	-115	-110	-127
1 GHz to 2 GHz	-100	-110	-105	-121
2 GHz to 4 GHz	-95	-105	-100	-115
4 GHz to 8 GHz	-89	-100	-94	-110
8 GHz to 16 GHz	-83	-94	-88	-105
16 GHz to 32 GHz	-77	-88	-82	-99
32 GHz to 43.5 GHz	-71	-82	-76	-93
43.5 GHz to 50 GHz	-71	-82	-76	-93

ООО "Техэнком" Контрольно-измерительные приборы и оборудование www.tehencom.com

Test Port Input – All Options

Ports 1, 2, 3, 4

Table 16. Test Port Noise Floor[1] (dBm)

Description	Specification	Typical
10 Hz IFBW		
10 MHz to 50 MHz[2]	-70	-76
50 MHz to 100 MHz[2]	-85	-91
100 MHz to 500 MHz[2]	-90	-98
500 MHz to 1 GHz	-106	-112
1 GHz to 2 GHz	-110	-114
2 GHz to 3.2 GHz	-110	-114
3.2 GHz to 10 GHz	-110	-114
10 GHz to 20 GHz	-111	-114
20 GHz to 26.5 GHz	-111	-114
26.5 GHz to 40 GHz	-108	-113
40 GHz to 43.5 GHz	-109	-113
43.5 GHz to 50 GHz	-107	-113

[1]Total average (rms) noise power calculated as the mean value of a linear magnitude trace expressed in dBm.

[2] May typically be degraded at particular frequencies below 500 MHz due to spurious receiver residuals.

Table 17. Direct Receiver Access Input Noise Floor[1] (dBm)

Description	Specification	Typical
10 MHz to 50 MHz[2]	-105	-111
50 MHz to 100 MHz[2]	-105	-111
100 MHz to 500 MHz[2]	-110	-118
500 MHz to 1 GHz	-127	-133
1 GHz to 2 GHz	-130	-134
2 GHz to 3.2 GHz	-122	-126

ООО "Техэнком" Контрольно-измерительные приборы и оборудование www.tehencom.com

3.2 GHz to 10 GHz	-122	-126
10 GHz to 20 GHz	-123	-126
20 GHz to 26.5 GHz	-123	-126
26.5 GHz to 40 GHz	-118	-123
40 GHz to 43.5 GHz	-119	-123
43.5 GHz to 50 GHz	-117	-123

[1]Total average (rms) noise power calculated as the mean value of a linear magnitude trace expressed in dBm.

[2] May typically be degraded at particular frequencies below 500 MHz due to spurious receiver residuals.

Table 18. Test Port Compression at 0.1 dB (dBm) - All Options

Description	Specification	Typical
10 MHz to-10 GHz	--	15
10 GHz to 50 GHz	--	13

Table 19. Receiver Compression Test Port Power (dBm) - Ports 1, 2, 3, 4

	Test Port Power			Receiver compression Magnitude (dB)	Receiver compression Phase (degree)
Description	Options 200 and 400	Options 219 and 419	Options 224 and 423		
500 MHz to 10 GHz[1]	13	13	13	0.15	1.5
10 GHz to 13.5 GHz	13	11	10	0.15	1.5
13.5 GHz to 20 GHz	13	9	9	0.15	1.5
20 GHz to 26.5 GHz	13	9	9	0.18	1.5
26.5 GHz to 32 GHz	13	9	8	0.18	1.5
32 GHz to 40 GHz	9	8	8	0.18	1.5
40 GHz to 43.5 GHz	8	8	8	0.18	1.5
43.5 GHz to 45 GHz	8	8	8	0.2	1.5
45 GHz to 47 GHz	6	6	6	0.2	1.5
47 GHz to 50 GHz	5	1	0	0.2	1.5

[1] Test port receiver compression at input levels below 500 MHz is negligible due to coupler roll off in this frequency range.

ООО "Техэнком" Контрольно-измерительные приборы и оборудование www.tehencom.com

Table 20. Trace Noise Magnitude (dB rms)

Ratioed measurement, nominal power at test port.

Description	1 kHz IFBW Specification	1 kHz IFBW Typical	100 kHz IFBW Typical	600 kHz IFBW Typical
10 MHz to 50 MHz	0.200	0.08	0.800	2.000
50 MHz to 100 MHz	0.020	0.013	0.120	0.300
100 MHz to 500 MHz	0.020	0.005	0.050	0.150
500 MHz to 1 GHz	0.003	0.002	0.012	0.030
1 GHz to 26.5 GHz	0.002	0.002	0.011	0.026
26.5 GHz to 43.5 GHz	0.003	0.002	0.011	0.026
43.5 GHz to 46 GHz	0.004	0.002	0.011	0.026
46 GHz to 47 GHz	0.004	0.002	0.011	0.026
47 GHz to 50 GHz	0.004	0.002	0.011	0.026

Table 21. Trace Noise Phase (deg rms)

Ratioed measurement, nominal power at test port.

Description	1 kHz IFBW Specification	1 kHz IFBW Typical	100 kHz IFBW Typical	600 kHz IFBW Typical
10 MHz to 50 MHz	1	0.6	6	14
50 MHz to 100 MHz	1	0.1	1	1.8
100 MHz to 500 MHz	0.5	0.035	0.35	1.0
500 MHz to 1 GHz	0.02	0.009	0.1	0.25
1 GHz to 26.5 GHz	0.02	0.009	0.08	0.18
26.5 GHz to 43.5 GHz	0.03	0.015	0.08	0.2
43.5 GHz to 46 GHz	0.03	0.015	0.09	0.2
46 GHz to 47 GHz	0.03	0.015	0.09	0.2
47 GHz to 50 GHz	0.03	0.015	0.09	0.2

Table 22. Reference Level Magnitude

Description	Specification
Range	+/-500 dB
Resolution	0.001 dB

Table 23. Reference Level Phase

Description	Specification
Range	+/-500°
Resolution	0.01°

Table 24. Stability Magnitude (dB/°C)

Stability is defined as a ratio measurement made at the test port.

Description	Specification	Typical
10 MHz to 50 MHz	--	0.02
50 MHz to 3.2 GHz	--	0.01
3.2 GHz to 10 GHz	--	0.01
10 GHz to 16 GHz	--	0.01
16 GHz to 20 GHz	--	0.015
20 GHz to 26.5 GHz	--	0.015
26.5 GHz to 32 GHz	--	0.02
32 GHz to 40 GHz	--	0.025
40 GHz to 43.5 GHz	--	0.025
43.5 GHz to 47 GHz	--	0.025
47 GHz to 50 GHz	--	0.03

Table 25. Stability Phase (°/°C)

Stability is defined as a ratio measurement made at the test port.

Description	Specification	Typical
10 MHz to 50 MHz	--	0.3
50 MHz to 3.2 GHz	--	0.15
3.2 GHz to 10 GHz	--	0.2
10 GHz to 16 GHz	--	0.25
16 GHz to 20 GHz	--	0.3
20 GHz to 26.5 GHz	--	0.4
26.5 GHz to 32 GHz	--	0.55
32 GHz to 40 GHz	--	0.7
40 GHz to 43.5 GHz	--	0.75
43.5 GHz to 47 GHz	--	0.75
47 GHz to 50 GHz	--	0.8

Table 26. Damage Input Level

Description	Specification
Test Port 1 or 2 or 3 or 4	> +30 dBm RF, 40 VDC
(Option 224 only) Source 2 Out 1 or Source 2 Out 2	> +30 dBm RF, 0 VDC

Dynamic Accuracy

Table 27. Dynamic Accuracy (Specification)

Accuracy of the test port input power reading relative to the reference input power level. [1]

Dynamic Accuracy, 0.010 GHz

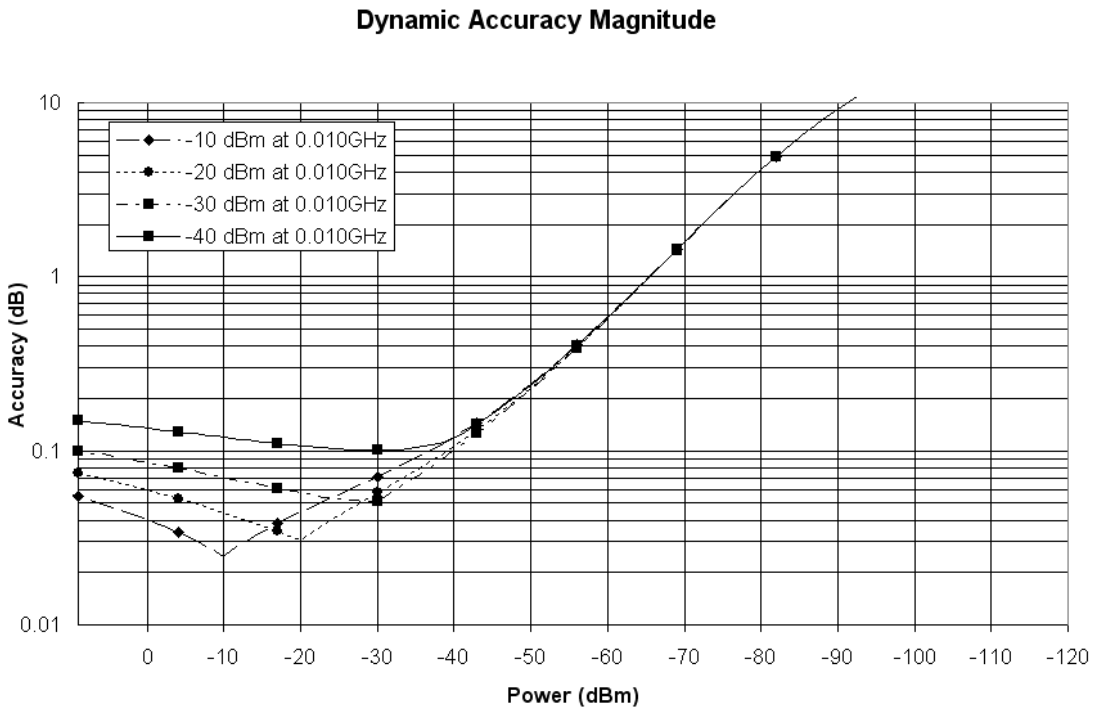

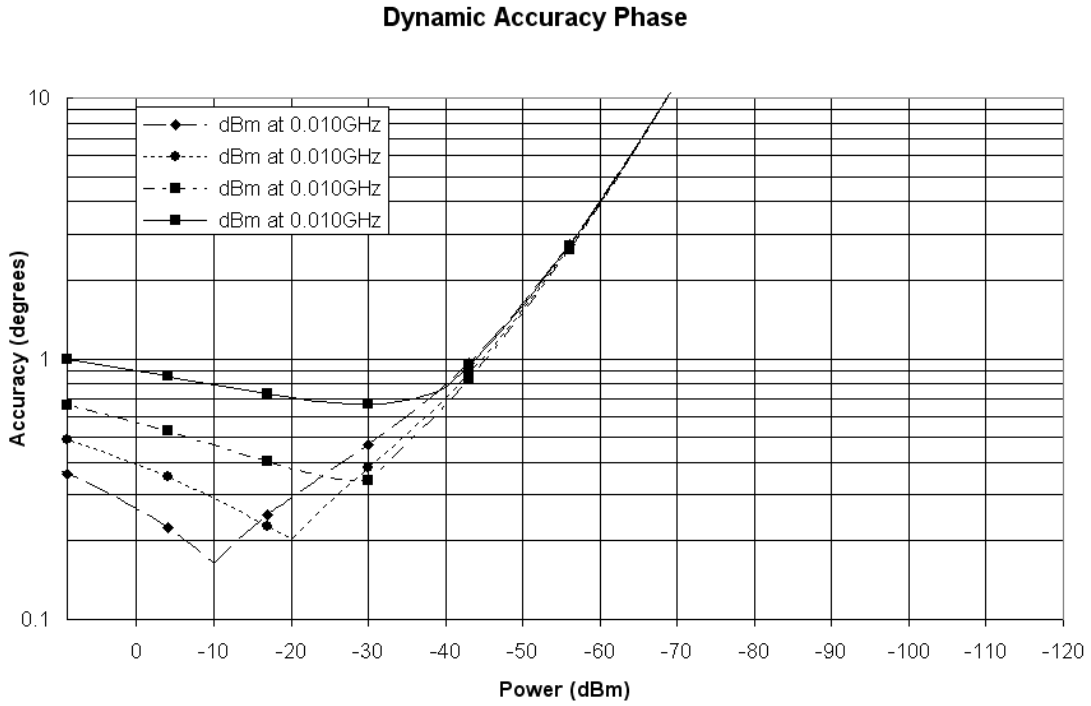

Dynamic Accuracy, 0.050 GHz

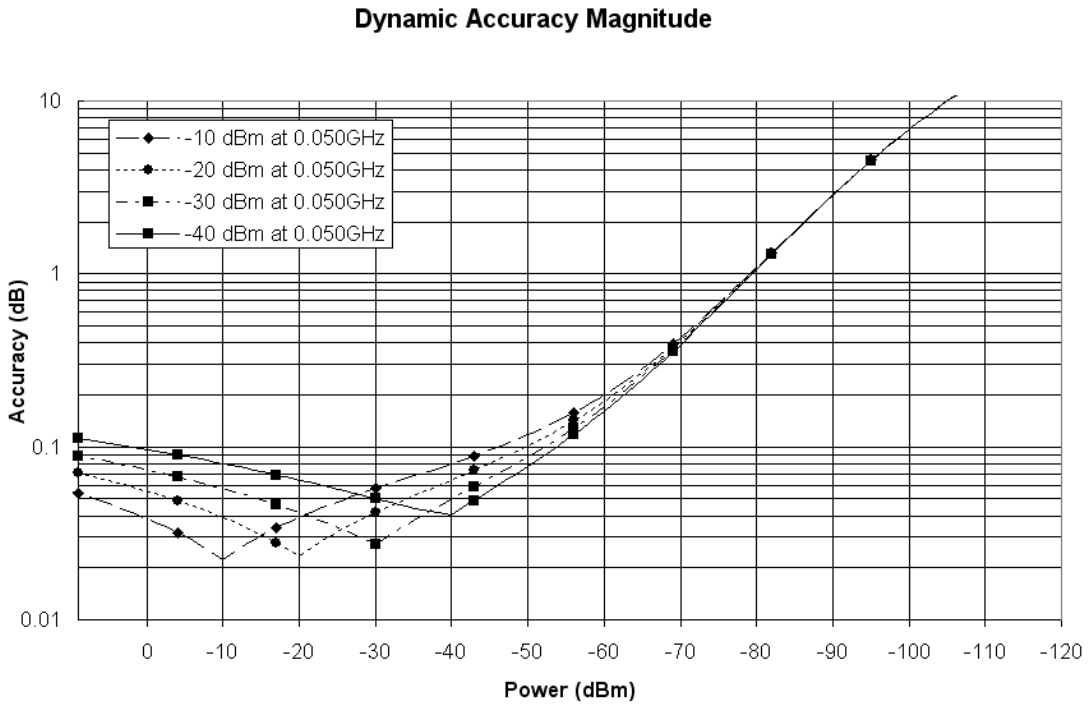

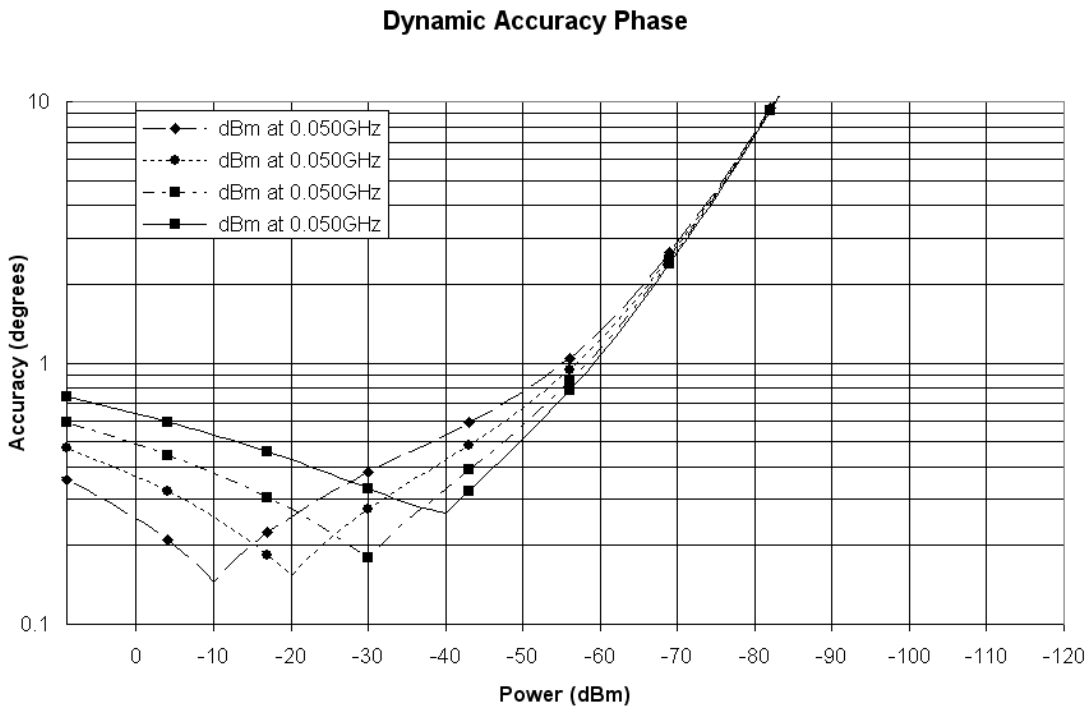

Dynamic Accuracy, 0.500 GHz

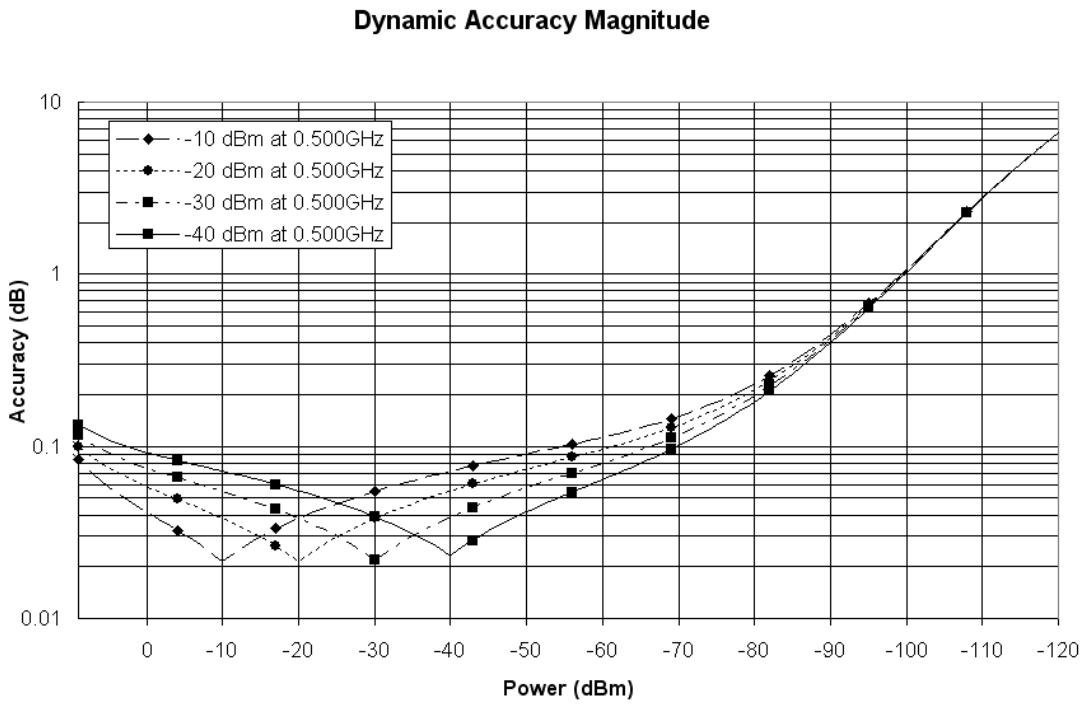

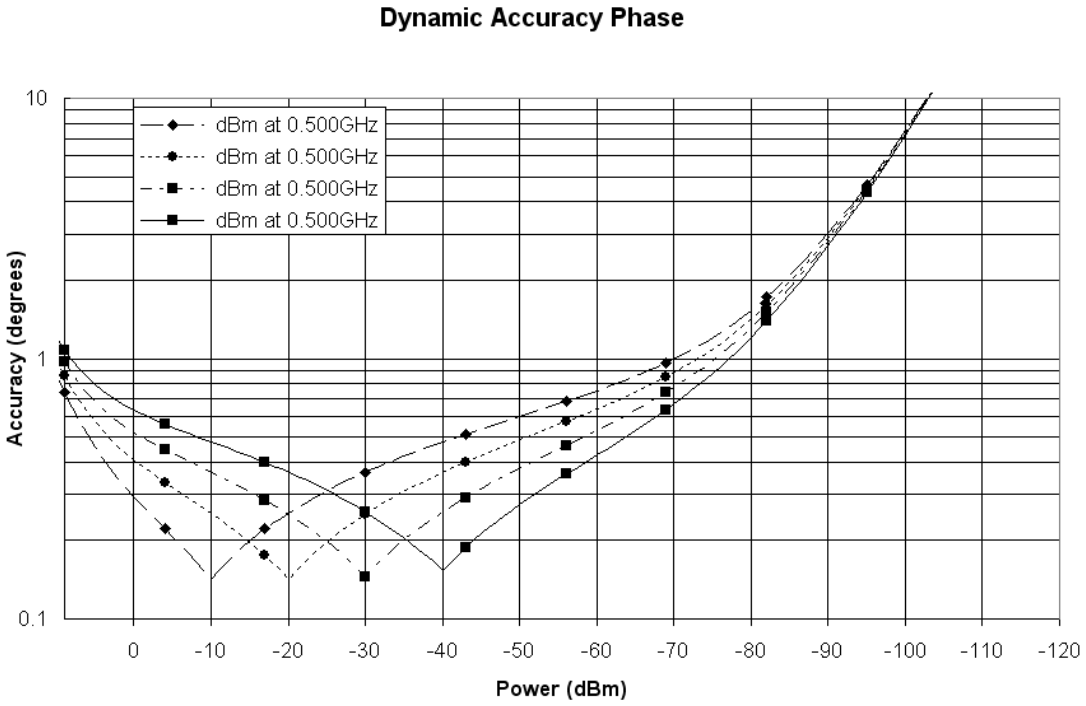

Dynamic Accuracy, 1 GHz - 10 GHz

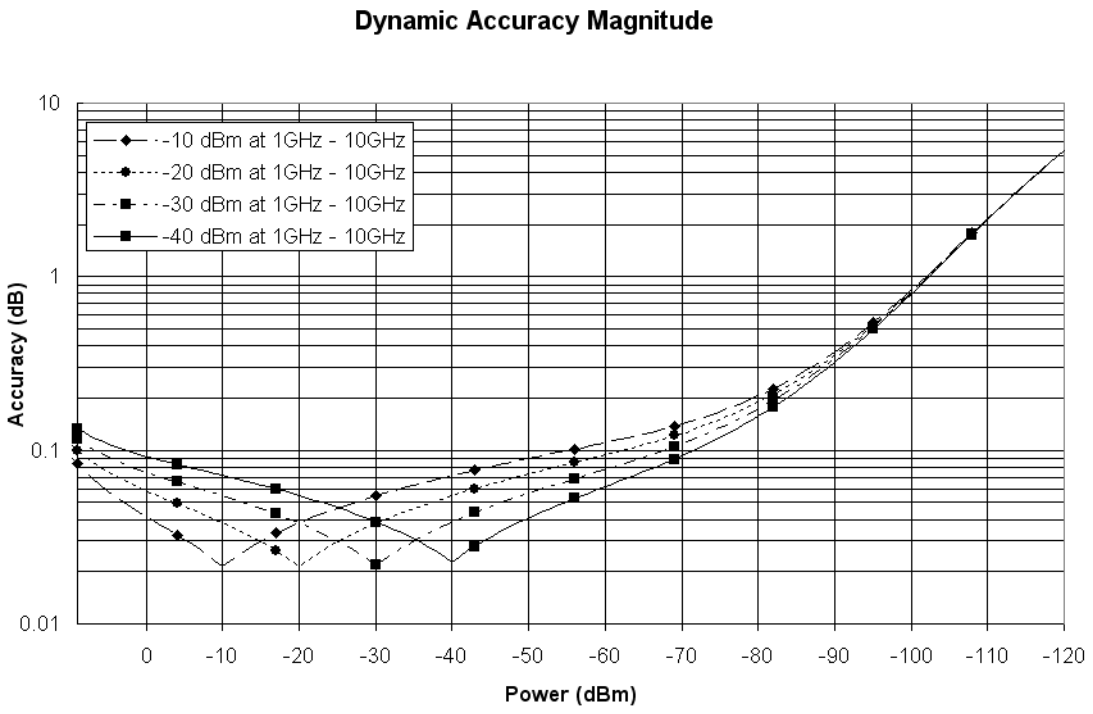

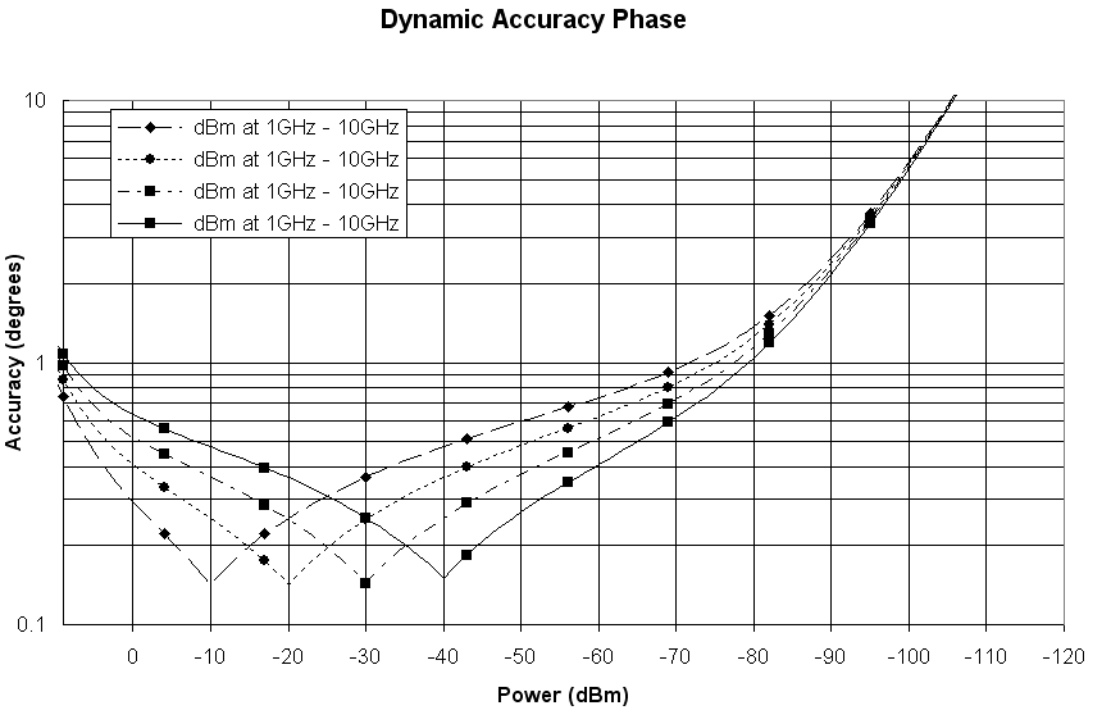

Dynamic Accuracy, 10 GHz – 13.5 GHz

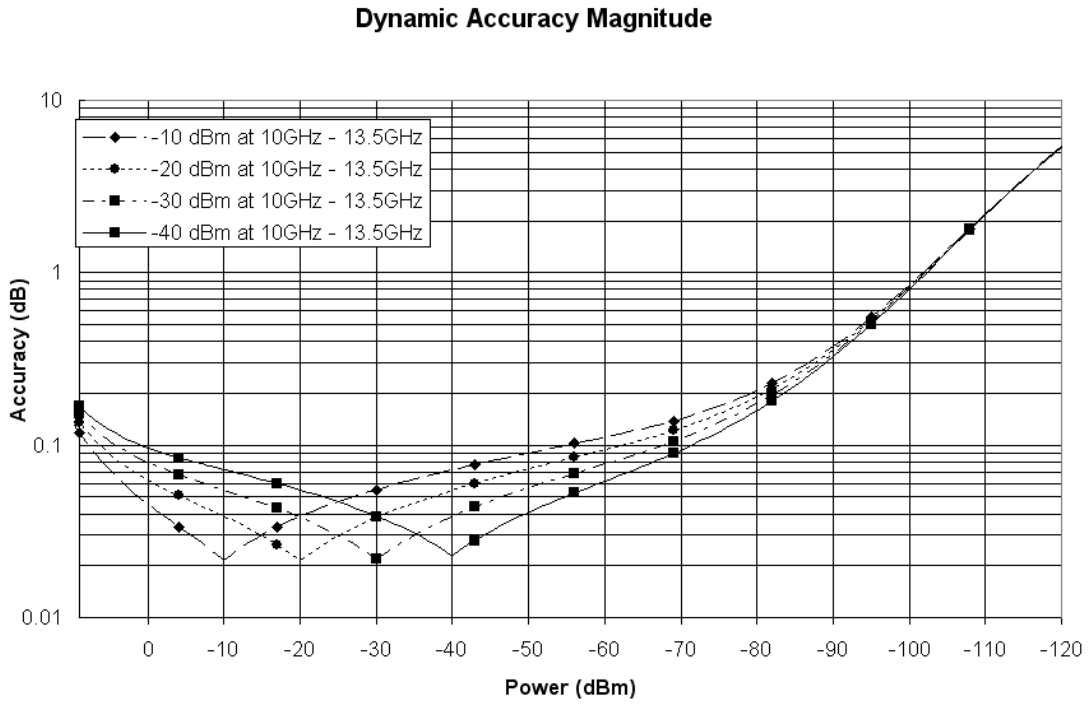

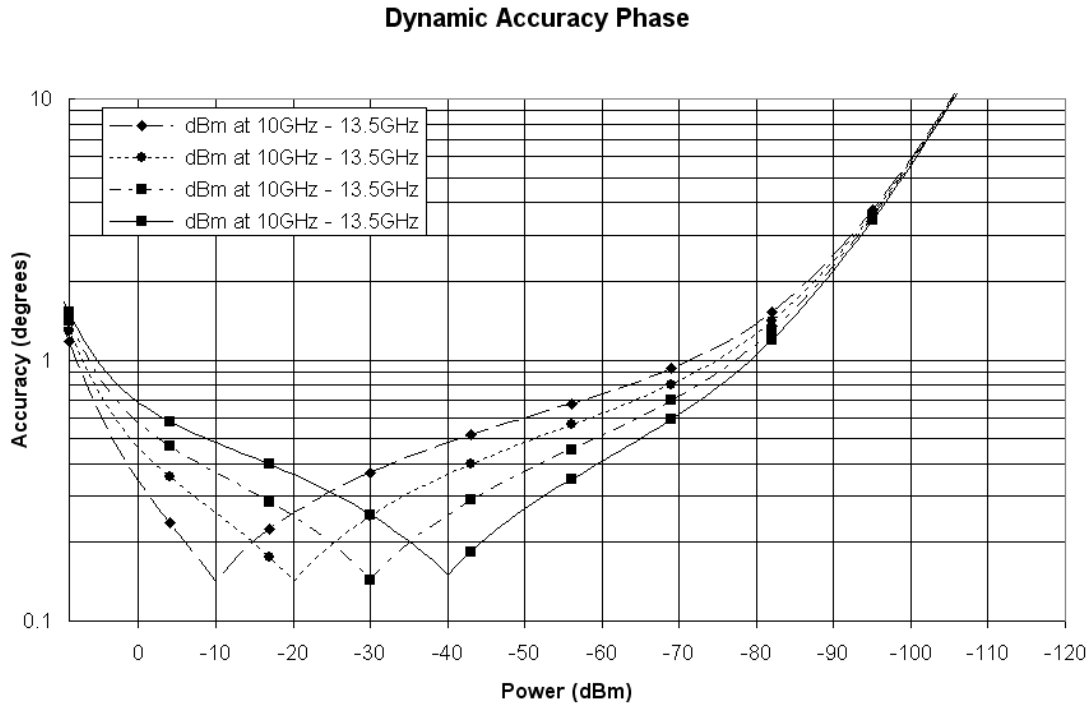

Dynamic Accuracy, 13.5 GHz – 20 GHz

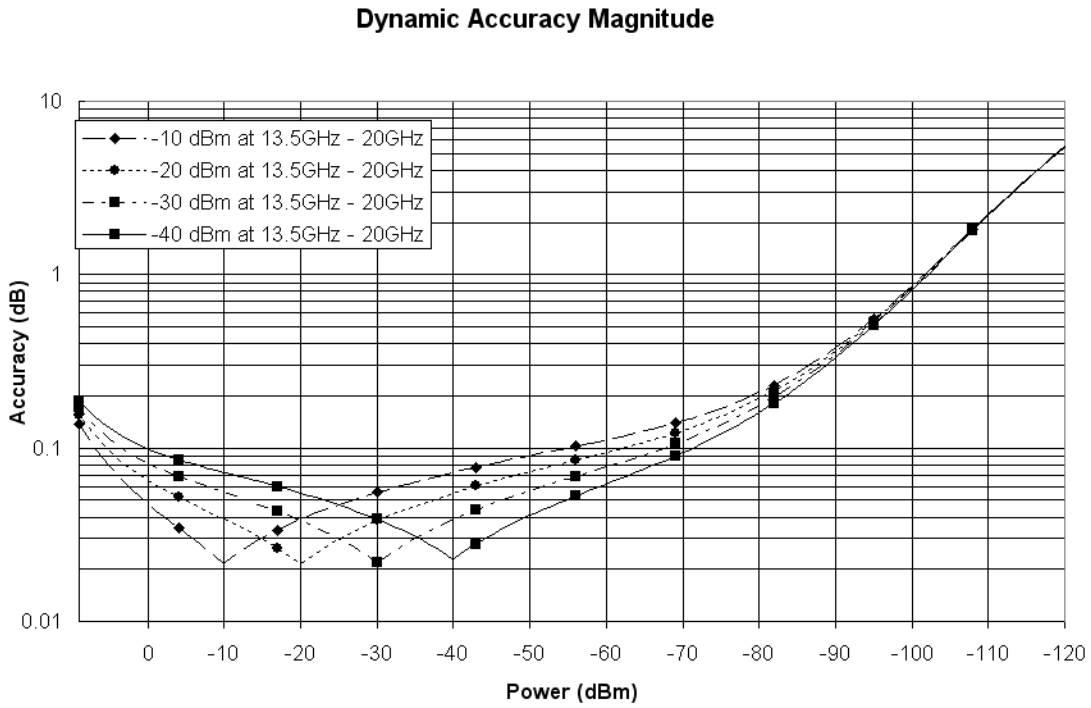

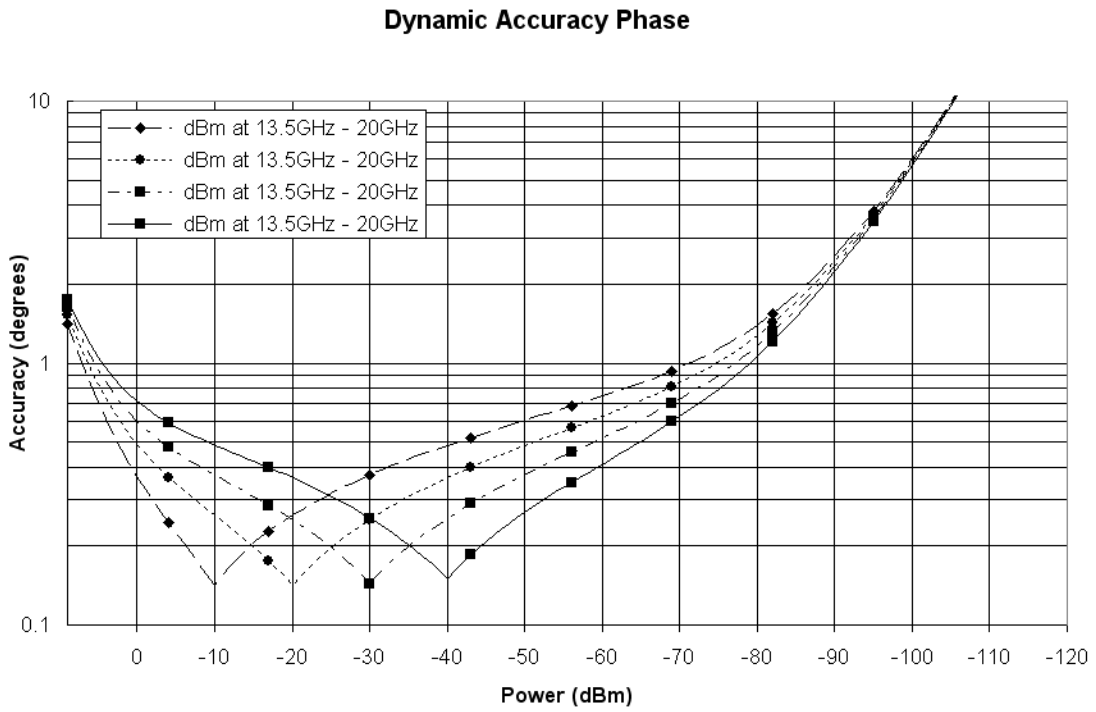

Dynamic Accuracy, 20 GHz - 26.5 GHz

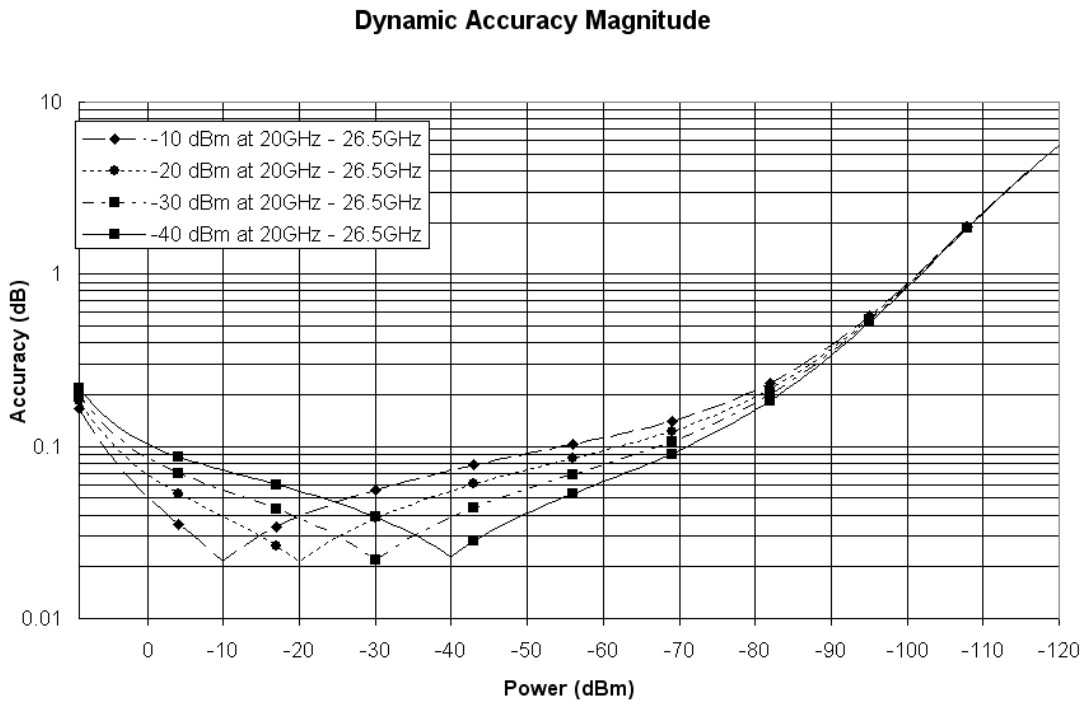

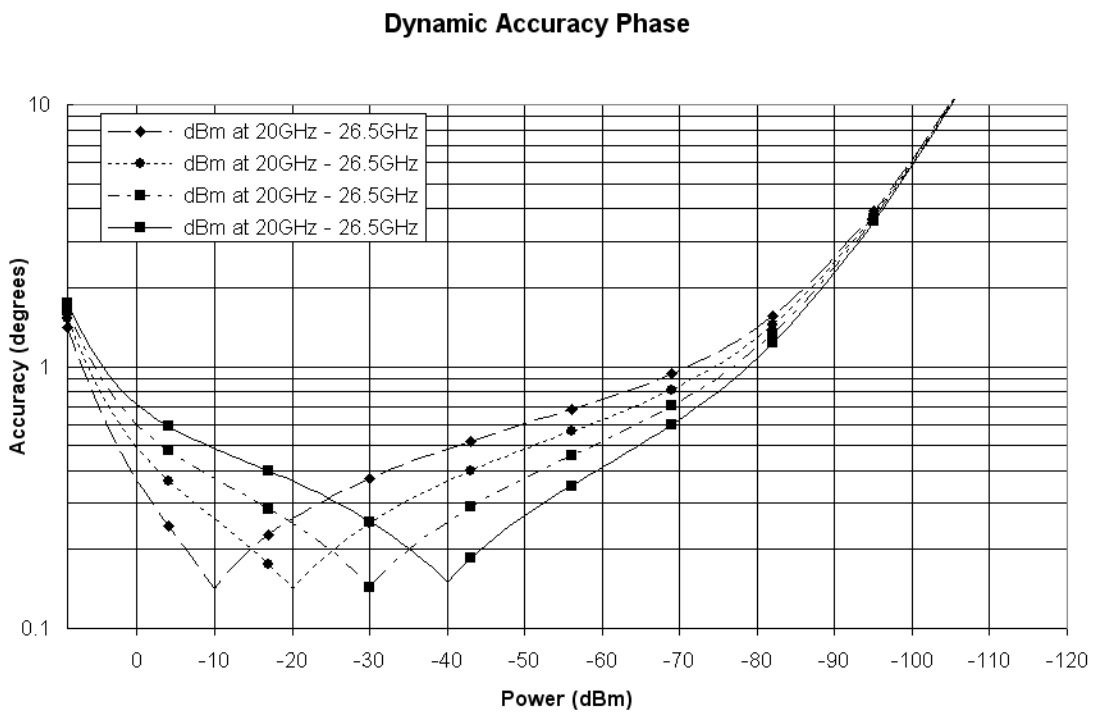

Dynamic Accuracy, 26.5 GHz to 32 GHz

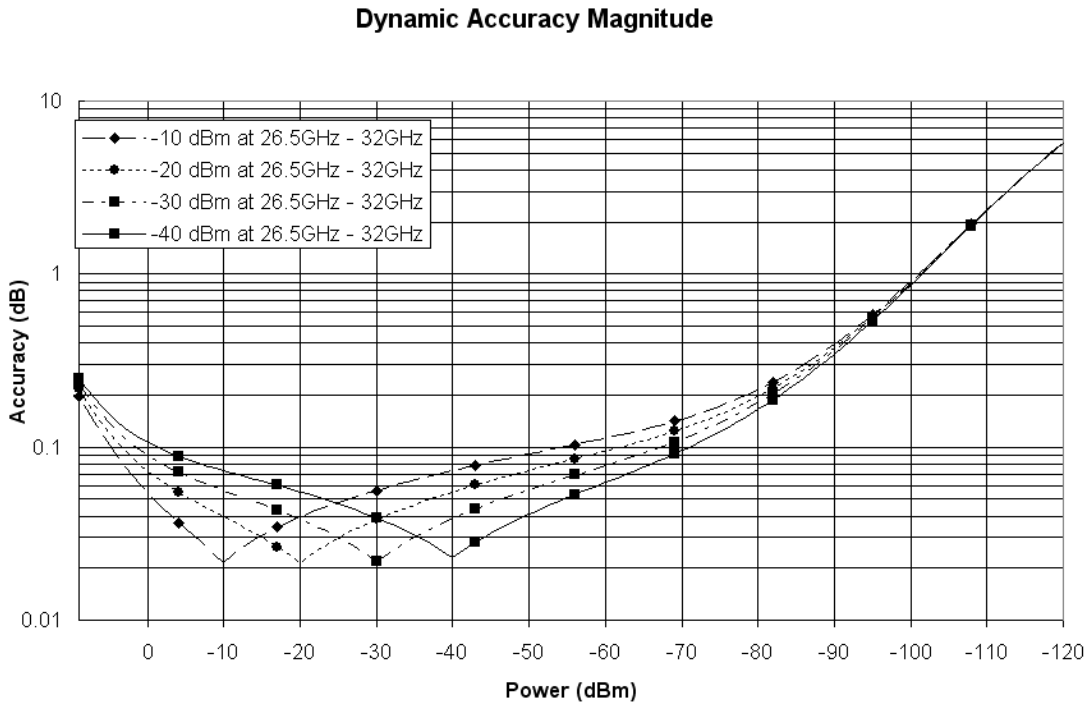

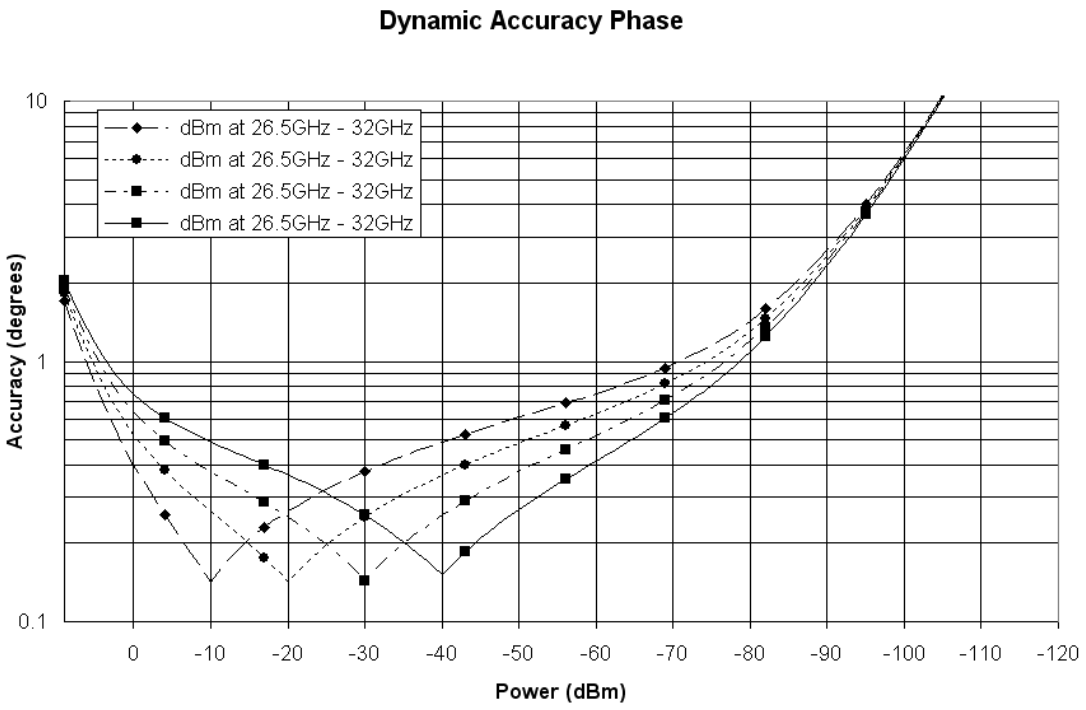

Dynamic Accuracy, 32 to 43.5 GHz

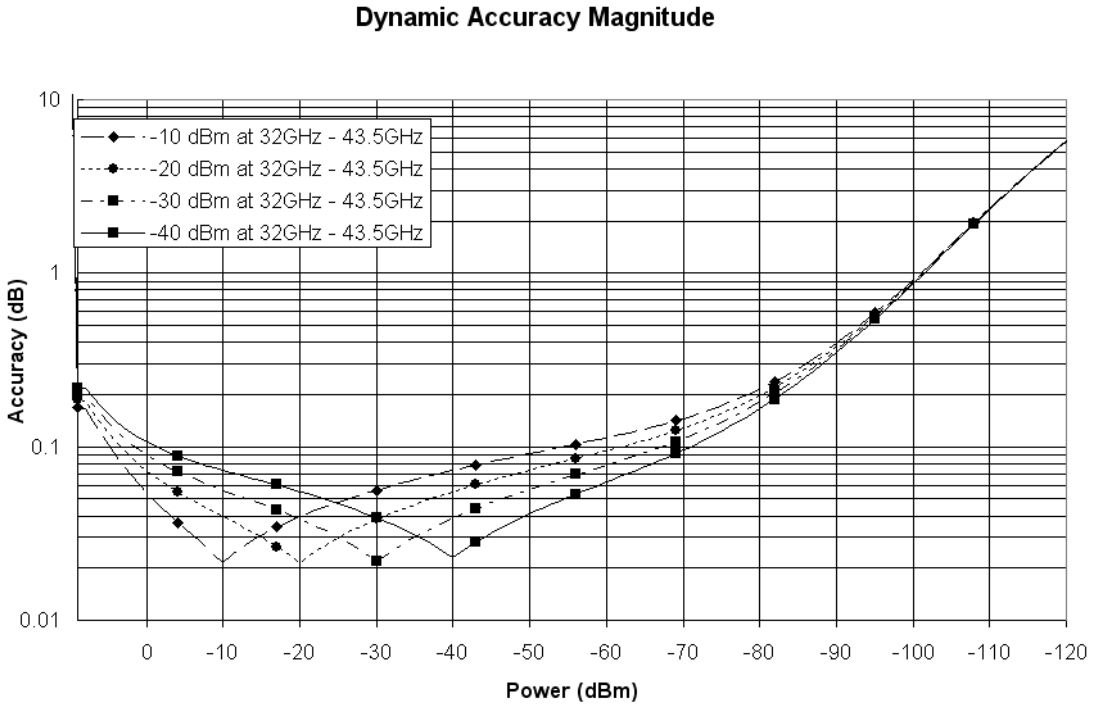

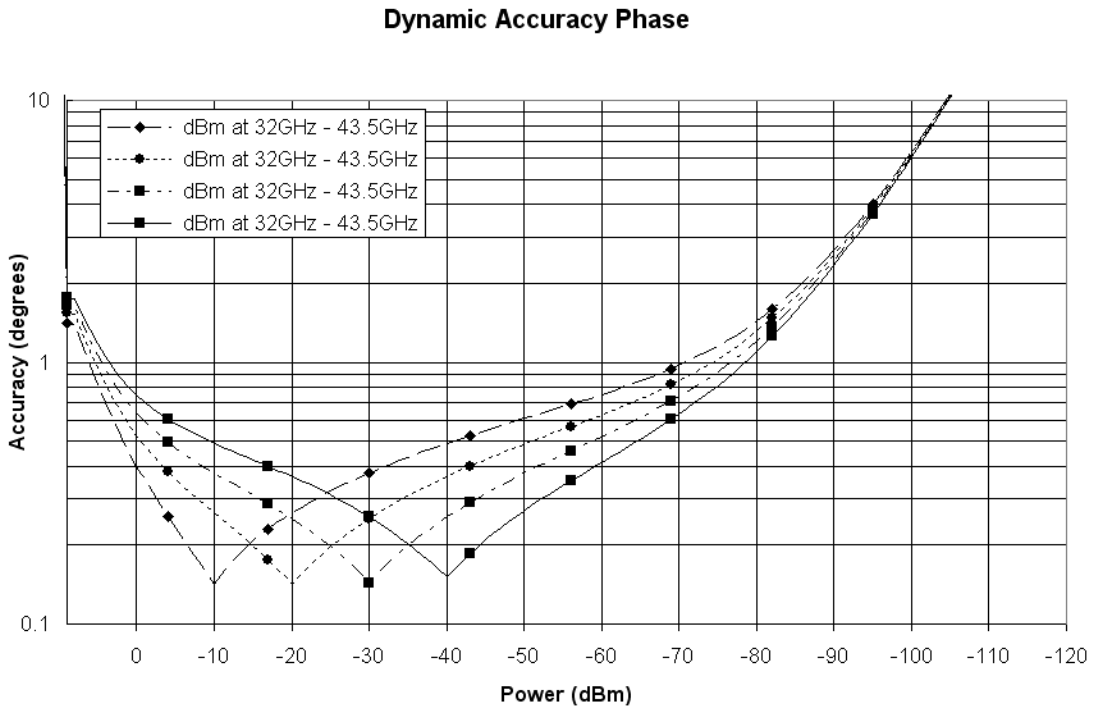

Dynamic Accuracy, 43.5 to 50 GHz

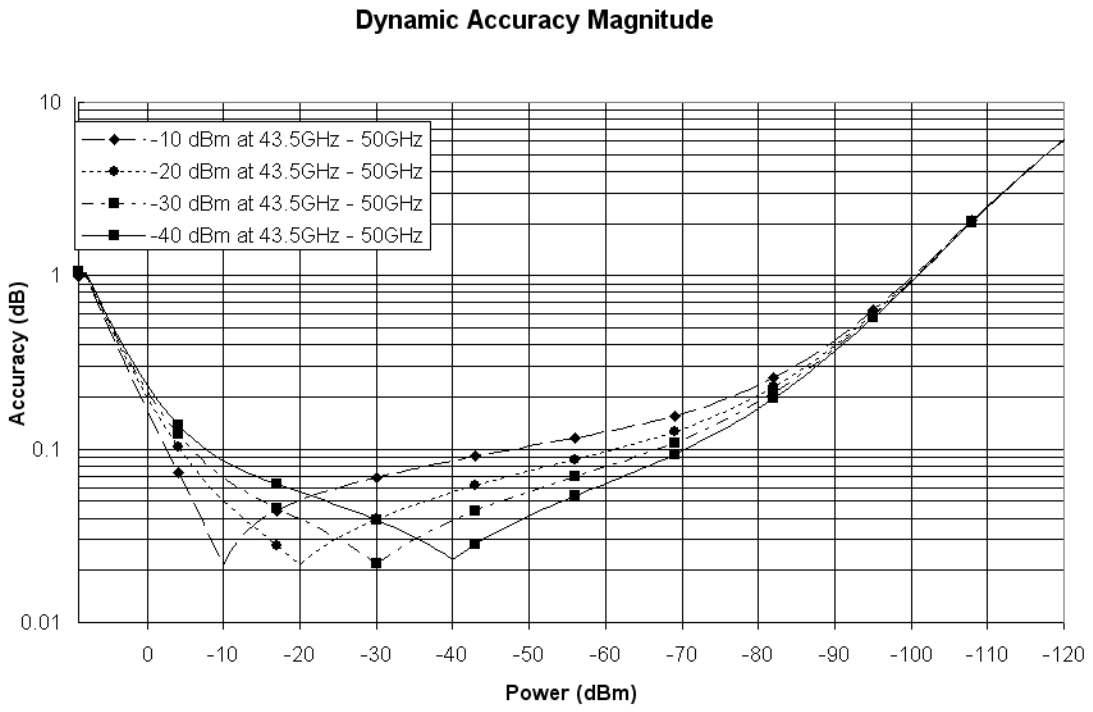

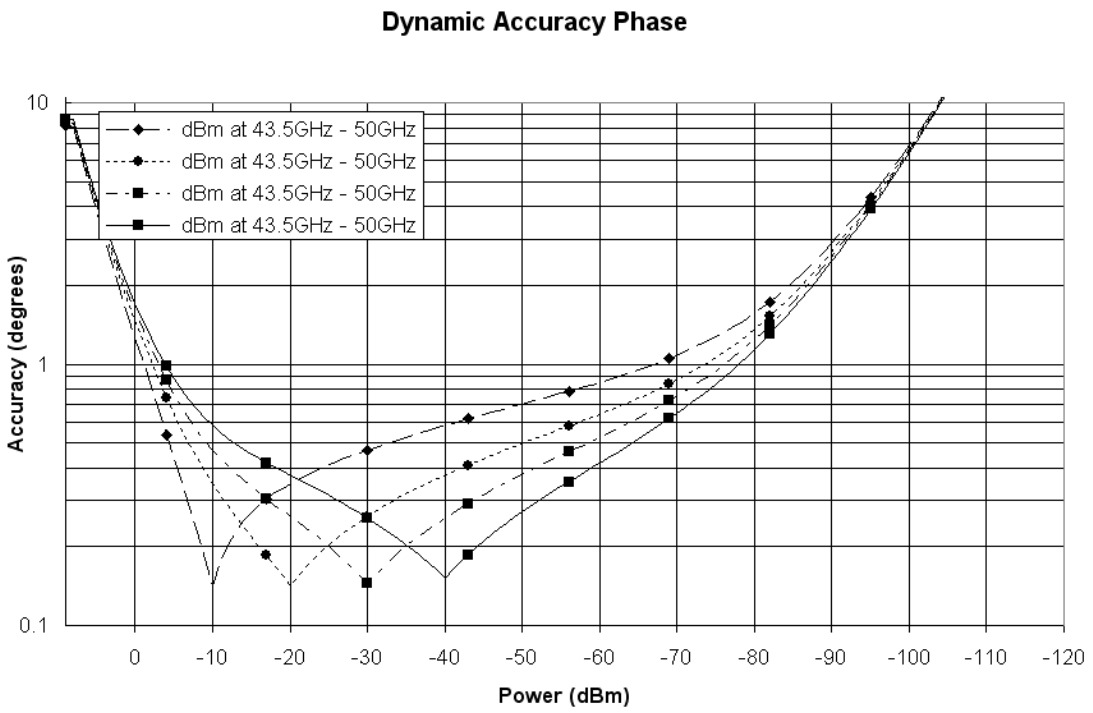

[1] Dynamic accuracy is verified with the following measurements:

- Compression over frequency
- IF linearity at a single frequency of 1.195 GHz using a reference level of -20 dBm for an input power range of 0 to -120 dBm.

ООО "Техэнком" Контрольно-измерительные приборы и оборудование www.tehencom.com

Table 28. Test Port Input (Group Delay)[1]

Description	Typical Performance
Aperture (selectable)	(frequency span)/(number of points -1)
Maximum Aperture	20% of frequency span
Range	0.5 x (1/minimum aperture)
Maximum Delay	Limited to measuring no more than 180° of phase change within the minimum aperture.)
Accuracy	See graph below. Char.

The following graph shows characteristic group delay accuracy with full 2-port calibration and a 10 Hz IF bandwidth. Insertion loss is assumed to be < 2 dB and electrical length to be ten meters.

For any S_{ij} Group Delay measurement, $S_{ii} = 0$, $S_{ij} = 1$, $S_{ji} = 0$, $S_{kl} = 0$ for all $kl \neq ij$

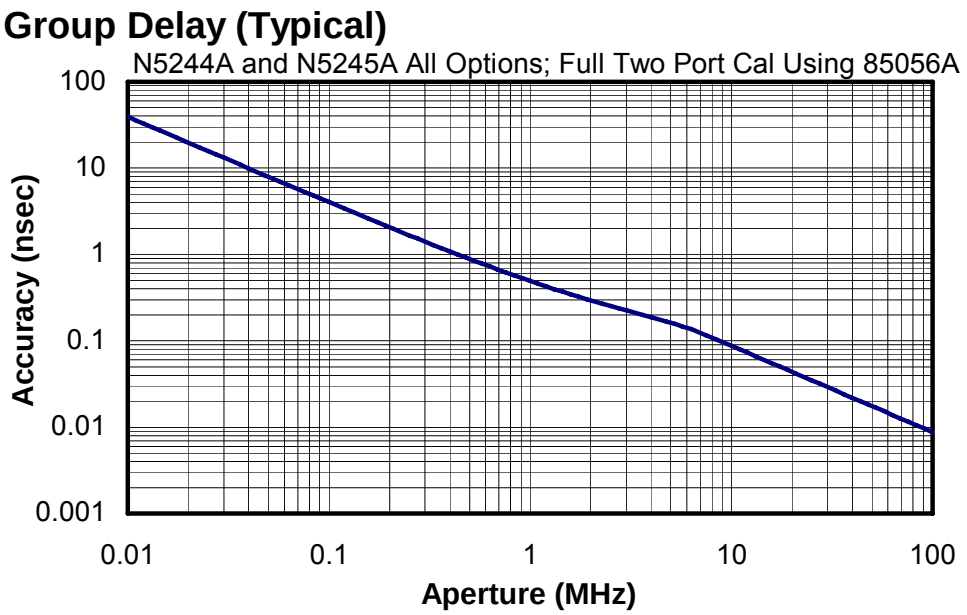

In general, the following formula can be used to determine the accuracy, in seconds, of specific group delay measurement:

±Phase Accuracy (deg)/[360 × Aperture (Hz)]

Depending on the aperture and device length, the phase accuracy used is either incremental phase accuracy or worst-case phase accuracy.

[1] Group delay is computed by measuring the phase change within a specified frequency step (determined by the frequency span and the number of points per sweep).

ООО "Техэнком" Контрольно-измерительные приборы и оборудование www.tehencom.com

General Information

- Miscellaneous Information
- Front Panel
- Rear Panel
- Environment and Dimensions

Table 29. Miscellaneous Information

Description	Supplemental Information
System IF Bandwidth Range	1 Hz to 5 MHz, nominal
CPU	Intel® 2.0 GHz Core 2 Duo® with 4 GByte RAM
LXI	Class C

Table 30. Front Panel Information - All Options

Description	Typical Performance
RF Connectors	
Type	2.4 mm (male) , 50 ohm, (nominal)
Center Pin Recession	0.002 in. (characteristic)
USB 2.0 Ports - Master (4 ports)	
Standard	Compatible with USB 2.0
Connector	USB Type-A female
Display	
Size	26.3 cm (10.4 in) diagonal color active matrix LCD; 1024 (horizontal) X 768 (vertical) resolution
Refresh Rate	Vertical 60 Hz; Horizontal 46.08 kHz
Pixels	Any of the following would cause a display to be considered faulty: • A complete row or column consists of “stuck” or “dark” pixels. • More than six “stuck on” pixels (but not more than three green) or more than 0.002% of the total pixels are within the LCD specifications. • More than twelve “dark” pixels (but no more than seven of the same color) or more than 0.004% of the total pixels are within the LCD specifications. • Two or more consecutive "stuck on" pixels or three or more consecutive "dark" pixel (but no more than one set of two consecutive dark pixels) • “Stuck on” “dark” pixels are less than 6.5 mm apart (excluding consecutive pixels)

ООО "Техэнком" Контрольно-измерительные приборы и оборудование www.tehencom.com

Table 30. (Continued) Front Panel Information - All Options

Display Range	
Magnitude	+/-2500 dB (at 500 dB/div), max
Phase	+/-2500° (at 500 dB/div), max
Polar	10 pUnits, min 10,000 Units, max
Display Resolution	
Magnitude	0.001 dB/div, min
Phase	0.01°/div, min
Marker Resolution	
Magnitude	0.001 dB, min
Phase	0.01°, min
Polar	10 pUnit, min

Table 31. Rear Panel Information - All Options

Description	**Typical Performance**
10 MHz Reference In	
Connector	BNC, female
Input Frequency	10 MHz ± 10 ppm, typical
Input Level	-15 dBm to +20 dBm, typical
Input Impedance	200 Ω, nom.
10 MHz Reference Out	
Connector	BNC, female
Output Frequency	10 MHz ± 1 ppm, typical
Signal Type	Sine Wave, typical
Output Level	+10 dBm ± 4 dB into 50 Ω
Output Impedance	50 Ω, nominal
Harmonics	<-40 dBc, typical

ООО "Техэнком" Контрольно-измерительные приборы и оборудование www.tehencom.com

Table 31. (Continued) Rear Panel Information

External IF Inputs	
Function	Allows use of external IF signals from remote mixers, bypassing the PNA's first converters
Connectors	SMA (female); A, B, C, D, R (4-port); A, B, R1, R2 (2-port)
Input Frequency	
Normal IF path	RF < 53 MHz: IF = 2.535 MHz RF >= 53 MHz: IF = 7.606 MHz
Narrowband IF path	IF = 10.70 MHz
Input Impedance	50 Ω
RF Damage Level	+23 dBm
DC Damage Level	5.5 VDC
0.1 dB Compression Point	
Normal IF path	-9.0 dBm at 7.606 MHz
Narrowband IF path	-17 dBm at 10.70 MHz
Pulse Inputs (IF Gates)	
Function	Internal receiver gates used for point-in-pulse and pulse-profile measurements
Connectors	15-pin mini D-sub
Input Impedance	1 K Ohm
Minimum Pulse Width, Source Modulators	33 ns
Minimum Pulse Width, Receiver Gates	20 ns
DC Damage Level	5.5 VDC
Drive Voltage	0 V (off), +3.3 V (on), nominal

ООО "Техэнком" Контрольно-измерительные приборы и оборудование www.tehencom.com

Table 31. (Continued) Rear Panel Information

RF Pulse Modulator Input (Source Modulator)		
On/Off Ratio		
10 MHz to 3.2 GHz	-64	
3.2 GHz to 43.5 GHz	-80	
43.5 GHz to 50 GHz	-80	
Pulse Period		
Minimum	33 ns	
Maximum	70 s	
Pulse Outputs		
Voltage (TTL)	High: 3.3V to 3.5V Low: <1V	
Impedance	50 Ohm	
External Test Set Driver		
Function	Used for driving remote mixers	
Connections	SMA (female)	
RF, LO Output Frequency Range	3.2 GHz to 19 GHz (N5244A and N5245A)	
Test Set Drivers (cont)	**Typical (dBm)**	
Rear Panel LO Power[1]	**Upper Limit (dBm)**	**Lower Limit (dBm)**
1.7 GHz to 7 GHz	5	-3
7 GHz to 15.5 GHz	0	-6
15.5 GHz to 26.5 GHz	4	-5
Rear Panel RF Power		
3.2 GHz to 5 GHz	-2	-8
5 GHz to 19 GHz	-3	-8

[1] LO output available in full analyzer's frequency range. The power is tested only from 3.2 GHz to 26.5 GHz

ООО "Техэнком" Контрольно-измерительные приборы и оборудование www.tehencom.com

Table 31. (Continued) Rear Panel Information

Description	Typical Performance
VGA Video Output	
Connector	15-pin mini D-Sub; Drives VGA compatible monitors
Devices Supported	**Resolutions**
Flat Panel (TFT)	1024 X 768, 800 X 600, 640 X 480
Flat Panel (DSTN)	800 X 600, 640 X 480
CRT Monitor	1280 X 1024, 1024 X 768, 800 X 600, 640 X 480
Simultaneous operation of the internal and external displays is allowed, but with 640 X 480 resolution only. If you change resolution, you can only view the external display (internal display will "white out").	
Bias Tee Inputs	
Connectors	BNC(f) for ports 1, 2, 3 and 4
Fuse	500 mA, bi-pin style
Maximum Bias Current	+/-200 mA with no degradation of RF specifications
Maximum Bias Voltage	+/-40 VDC
Trigger Inputs/Outputs	BNC(f), TTL/CMOS compatible
Test Set IO	25-pin D-Sub connector, available for external test set control.
Power IO	9-pin D-Sub, female; analog and digital IO
Handler IO	36-pin parallel I/O port; all input/output signals are default set to negative logic; can be reset to positive logic via GPIB command.
GPIB	Two ports - dedicated controller and dedicated talker/listener. 24-pin D-sub (Type D-24), female; compatible with IEEE-488.
Parallel Port (LPT1)	25-pin D-Sub miniature connector, female; provides connection to printers or any other parallel port peripherals
USB Ports	Four ports on front panel (all Host) and five ports (four Host and one Device) on rear panel. Type A configuration (eight Host) and Type B configuration (one Device), USB 2.0 compatible. The total current limit for all rear panel USB ports is 2.0 amps. The total current limit for all front panel USB is limited to 0.9 amps.
LAN	10/100BaseT Ethernet, 8-pin configuration; auto selects between the two data rates

Table 31. (Continued) Rear Panel Information

Line Power	
Frequency, Voltage	50/60/400 Hz for 100 to 120 VAC 50/60 Hz for 220 to 240 VAC
	Power supply is auto switching
Max	450 watts

Table 32. Analyzer Dimensions and Weight

All N5244A and N5245A models are shipped with handles.

Cabinet Dimensions	Height	Width	Depth
Excluding front and rear panel hardware, feet, and handles.	266 mm 10.5 in	425.9 mm 16.8 in	582.3 mm 22.9 in
Excluding front and rear panel hardware, feet, and handles. Including rack-mount flanges.	266 mm 10.5 in EIA RU[1] = 6	482.9 mm 19.0 in	582.3 mm 22.9 in
As shipped - including front panel connectors, rear panel bumpers, and feet.	280 mm 11.0 in	482.9 mm 19.0 in	649.6 mm 25.6 in
As shipped including handles.	280 mm 11.0 in	458.7 mm 18.1 in	649.6 mm 25.6 in
As shipped including rack-mount flanges.	280 mm 11.0 in	482.9 mm 19.0 in	649.6 mm 25.6 in
As shipped including handles and rack-mount flanges.	280 mm 11.0 in	482.9 mm 19.0 in	649.6 mm 25.6 in

[1]Electronics Industry Association rack units. 1 RU = 1.75 in.

Weight		
	2-port models (Option 200 or 219 or 224)	**4-port models (Option 400 or 419 or 423)**
Net	39.1 kg (86 lb), nominal	41.8 kg (92 lb), nominal
Shipping	55 kg (121 lb), nominal	58.2 kg (128 lb), nominal

ООО "Техэнком" Контрольно-измерительные приборы и оборудование www.tehencom.com

Measurement Throughput Summary

- Typical Cycle Time for Measurement Completion
- Cycle Time vs. IF Bandwidth
- Cycle Time vs. Number of Points
- Data Transfer Time

Table 33. Typical Cycle Time[a] (ms) for Measurement Completion

All Options

	Number of Points				
	201	**401**	**1601**	**16001**	**32001**
Start 9 GHz, Stop 10 GHz, 600 kHz IF bandwidth					
Uncorrected	6	6.3	12	67	134
2-Port cal	24	26	36	155	310
Start 9 GHz, Stop 10 GHz, 10 kHz IF bandwidth					
Uncorrected	36	56	205	1960	3920
2-Port cal	80	119	416	3950	7900
Start 9 GHz, Stop 10 GHz, 1 kHz IF bandwidth					
Uncorrected	244	453	1762	17200	34400
2-Port cal	474	920	3547	34500	69000
Start 10 GHz, Stop 20 GHz, 600 kHz IF bandwidth					
Uncorrected	24	27	42	94	147
2-Port cal	50	63	91	200	337
Start 10 GHz, Stop 20 GHz, 10 kHz IF bandwidth					
Uncorrected	75	134	265	1990	3964
2-Port cal	156	277	547	4025	7930
Start 10 GHz, Stop 20 GHz, 1 kHz IF bandwidth					
Uncorrected	240	466	1800	17520	35000
2-Port cal	490	940	3600	35092	70100

ООО "Техэнком" Контрольно-измерительные приборы и оборудование www.tehencom.com

Table 33. (Continued) Typical Cycle Time[a] (ms) for Measurement Completion

	Number of Points				
	201	**401**	**1601**	**16001**	**32001**
Start 10 MHz, Stop 50 GHz, 600 kHz IF bandwidth					
Uncorrected	67	79	110	281	562
2-Port cal	137	163	225	552	1104
Start 10 MHz, Stop 50 GHz, 10 kHz IF bandwidth					
Uncorrected	100	165	539	2200	4400
2-Port cal	203	328	1085	4445	8890
Start 10 MHz, Stop 50 GHz, 1 kHz IF bandwidth					
Uncorrected	268	500	1860	17828	35656
2-Port cal	541	1005	3730	35735	71470

[a] Includes sweep time, retrace time and band-crossing time. Analyzer display turned off with DISPLAY:ENABLE OFF. Add 21 ms for display on. Data for one trace (S_{11}) measurement.

ООО "Техэнком" Контрольно-измерительные приборы и оборудование www.tehencom.com

Table 34. Cycle Time vs. IF Bandwidth

Applies to the Preset condition (201 points, correction off) except for the following changes:

- CF = 10 GHz
- Span = 100 MHz
- Display off (add 21 ms for display on)

Description	Typical Performance	
IF Bandwidth (Hz)	Cycle Time (ms)[1]	Trace Noise Magnitude (dB rms)
600,000	6.0	0.026
100,000	6.8	0.011
30,000	12	0.007
10,000	30	0.004
3,000	75	0.003
1,000	228	0.002
300	645	<0.001
100	1831	<0.001
30	5984	<0.001
10	17830	<0.001
3	60000	<0.001

a Cycle time includes sweep and retrace time.

ООО "Техэнком" Контрольно-измерительные приборы и оборудование www.tehencom.com

Table 35. Cycle Time vs. Number of Points

Applies to the Preset condition (correction off) except for the following changes:

- CF = 10 GHz
- Span = 100 MHz
- Display off (add 21 ms for display on)

Description	Typical Performance	
IF Bandwidth (Hz)	Number of Points	Cycle Time (ms)[1]
1,000	3	7.4
	11	19
	51	64
	101	118
	201	228
	401	444
	801	874
	1,601	1725
	6,401	6785
	16,001	16782
	32,001	33390
10,000	3	5.3
	11	7.4
	51	10.7
	101	17.5
	201	31
	401	56
	801	105
	1,601	203
	6,401	794
	16,001	1976
	32,001	3940

Table 35. (Continued) Cycle Time vs. Number of Points

Description	Typical Performance	
IF Bandwidth (Hz)	Number of Points	Cycle Time (ms)[1]
30,000	3	5.0
	11	5.4
	51	6.0
	101	7.7
	201	12.2
	401	18.7
	801	33
	1,601	66
	6,401	242
	16,001	597
	32,001	1184
600,000	3	5.0
	11	5.1
	51	5.2
	101	5.2
	201	5.3
	401	6.0
	801	7.6
	1,601	11
	6,401	30
	16,001	68
	32,001	130

[1] Cycle time includes sweep and retrace time.

ООО "Техэнком" Контрольно-измерительные приборы и оборудование www.tehencom.com

Table 36. Data Transfer Time (ms)

Description	Typical Performance				
	Number of Points				
	201	401	1601	16,001	32,001
SCPI over GPIB (Program executed on external PC[2])					
32-bit floating point	5.6	10.5	39.9	400	800
64-bit floating point	10.5	20.3	79.2	788	1576
ASCII	46	92.5	370	3702	5404
SCPI over SICL/LAN or TCP/IP Socket (Program executed in the analyzer)					
32-bit floating point	0.18	0.21	0.5	3.6	7.2
64-bit floating point	0.22	0.28	0.62	5.3	10.6
ASCII	6.3	12.3	47.3	470	940
COM[3] (Program executed in the analyzer)					
32-bit floating point	<0.15	0.15	0.2	0.6	1.2
Variant type	.36	0.6	1.8	17	35
DCOM over LAN[3] (Program executed on external PC)					
32-bit floating point	<1.0	1.5	2.1	7.5	14
Variant type	2.5	3.5	10	84	168

[1] Measured with the analyzer display off. Values will increase slightly if the analyzer display is on.

[2] Measured when using the SCPI command DISPlay: VISible OFF.

[3] Values are for real and imaginary pairs, with the analyzer display off.

Note: Specifications for Recall & Sweep Speed are not provided for the N5244A and N5245A analyzers.

Specifications: Front-Panel Jumpers

Model N5244A and N5245A

Note: All PNA-X options have the following front-panel jumpers for each port.

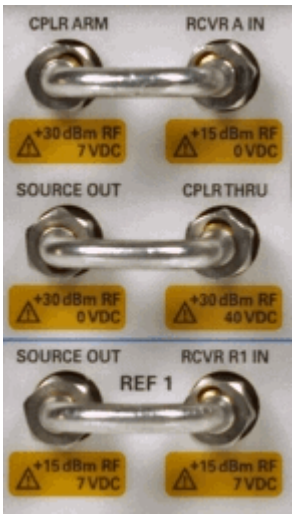

- Measurement Receiver Inputs
- Reference Receiver Inputs
- Reference Outputs (Source Out)
- Source Outputs
- Coupler Inputs

ООО "Техэнком" Контрольно-измерительные приборы и оборудование www.tehencom.com

Table 37. Measurement Receiver Inputs

(Rcvr A IN, Rcvr B IN, Rcvr C IN, Rcvr D IN) @ 0.1dB Typical Compression

Description	Typical
Maximum Input Level	All Options
10 MHz to 50 MHz[1]	--
50 MHz to 500 MHz[1]	--
500 MHz-to 1 GHz	-2
1 GHz to 2 GHz	-1
2 GHz to 3.2 GHz	0
3.2 GHz to 10 GHz	0
10 GHz to 16 GHz	-3
16 GHz to 26.5 GHz	-2
26.5 GHz to 30 GHz	-1
30 GHz to 32 GHz	-1
32 GHz to 35 GHz	-1
35 GHz to 43.5 GHz	-1
43.5 GHz to 47 GHz	0
47 GHz to 50 GHz	0
Damage Level	
	+15 dBm
Maximum DC Level	
	0 V

[1]Test port receiver compression at specified input levels below 500 MHz is negligible due to coupler roll off in this frequency range.

ООО "Техэнком" Контрольно-измерительные приборы и оборудование www.tehencom.com

Table 38. Reference Receiver Input

(RCVR R1 IN) @ Max Specified Output Power

Description	Typical					
	Option 200 or 400 Filtered Mode	Option 200 or 400 Hi Pwr Mode	Option 224 or 423 Filtered Mode	Option 219 or 419 Filtered Mode	Option 219 or 419 Hi Pwr Mode	Option 224 or 423 Hi Pwr Mode
Maximum Input Level						
10 MHz to 50 MHz	-33	-25	-32	-32	-27	-25
50 MHz to 500 MHz	-21	-16	-19	-19	-14	-14
500 MHz-to 1 GHz	-9	-4	-7	-7	-2	-2
1 GHz to 2 GHz	-9	-4	-7	-7	-3	-2
2 GHz to 3.2 GHz	-8	-6	-7	-6	-4	-5
3.2 GHz to 10 GHz	-3	-3	-3	0	0	-3
10 GHz to 16 GHz	-3	-3	-3	-1	-1	-3
16 GHz to 26.5 GHz	-3	-3	-4	-1	-1	-4
26.5 GHz to 30 GHz	-3	-3	-3	0	0	-3
30 GHz to 32 GHz	-4	-4	-5	-2	-2	-5
32 GHz to 35 GHz	-2	-2	-2	0	0	-2
35 GHz to 43.5 GHz	-3	-3	-5	-1	-1	-5
43.5 GHz to 47 GHz	-6	-6	-23	-5	-5	-23
47 GHz to 50 GHz	-19	-19	-22	-17	-17	-22
Damage Level	+15 dBm					
Maximum DC Level	+/-7 VDC					

Table 39a. Reference Receiver Input

(RCVR R2 IN, RCVR R3 IN, RCVR R4 IN) @ Max Specified Output Power

Description	Typical					
	Option 400 RCVR R3 IN Filtered Mode	Option 400 RCVR R3 IN Hi Pwr Mode	Option 200 or 400 RCVR R2 IN RCVR R4 IN	Option 419 RCVR R3 IN Filtered Mode	Option 419 RCVR R3 IN Hi Pwr Mode	Option 219 or 419 RCVR R2 IN RCVR R4 IN
Maximum Input Level						
10 MHz to 50 MHz	-31	-23	-27	-31	-26	-25
50 MHz to 500 MHz	-19	-14	-14	-18	-13	-14
500 MHz-to 1 GHz	-7	-2	-2	-6	-1	-2
1 GHz to 2 GHz	-7	-2	-2	-6	-2	-2
2 GHz to 3.2 GHz	-7	-5	-2	-4	-2	-2
3.2 GHz to 10 GHz	-1	-1	-1	1	1	-1
10 GHz to 16 GHz	-1	-1	-1	0	0	-2
16 GHz to 26.5 GHz	-1	-1	-1	1	1	-2
26.5 GHz to 30 GHz	0	0	-1	2	2	-3
30 GHz to 32 GHz	-1	-1	-2	0	0	-5
32 GHz to 35 GHz	0	0	-1	2	2	-3
35 GHz to 43.5 GHz	-2	-2	-2	0	0	-5
43.5 GHz to 47 GHz	-5	-5	-5	-4	-4	-9
47 GHz to 50 GHz	-17	-17	-17	-16	-16	-21
Damage Level	+15 dBm					
Maximum DC Level	+/-15 VDC					

ООО "Техэнком" Контрольно-измерительные приборы и оборудование www.tehencom.com

Table 39b. Reference Receiver Input

(RCVR R2 IN, RCVR R3 IN, RCVR R4 IN) @ Max Specified Output Power

Description	Typical		
	Option 423 RCVR R3 IN Filtered Mode	Option 423 RCVR R3 IN Hi Pwr Mode	Option 224 or 423 RCVR R2 IN RCVR R4 IN Filtered Mode Note: No filtered mode for ports 2 & 4
Maximum Input Level			
10 MHz to 50 MHz	-31	-24	-29
50 MHz to 500 MHz	-18	-13	-16
500 MHz-to 1 GHz	-6	-1	-4
1 GHz to 2 GHz	-6	-1	-4
2 GHz to 3.2 GHz	-5	-3	-4
3.2 GHz to 10 GHz	0	0	0
10 GHz to 16 GHz	-2	-2	-2
16 GHz to 26.5 GHz	-2	-2	-2
26.5 GHz to 30 GHz	-1	-1	-2
30 GHz to 32 GHz	-3	-3	-4
32 GHz to 35 GHz	0	0	-2
35 GHz to 43.5 GHz	-3	-3	-4
43.5 GHz to 47 GHz	-22	-22	-8
47 GHz to 50 GHz	-21	-21	-21
Damage Level	+15 dBm		
Maximum DC Level	+/-15 VDC		

ООО "Техэнком" Контрольно-измерительные приборы и оборудование www.tehencom.com

Table 40. Reference Output

(REF 1 SOURCE OUT) @ Max Specified Output Power

Description	Typical					
	Option 200 or 400 Filtered Mode	Option 200 or 400 Hi Pwr Mode	Option 219 or 419 Filtered Mode	Option 219 or 419 Hi Pwr Mode	Option 224 or 423 Filtered Mode	Option 224 or 423 Hi Pwr Mode
Maximum Input Level						
10 MHz to 50 MHz	-33	-25	-32	-27	-32	-25
50 MHz to 500 MHz	-21	-16	-19	-14	-19	-14
500 MHz-to 1 GHz	-9	-4	-7	-2	-7	-2
1 GHz to 2 GHz	-9	-4	-7	-3	-7	-2
2 GHz to 3.2 GHz	-8	-6	-6	-4	-7	-5
3.2 GHz to 10 GHz	-3	-3	0	0	-3	-3
10 GHz to 16 GHz	-3	-3	-1	-1	-3	-3
16 GHz to 26.5 GHz	-3	-3	-1	-1	-4	-4
26.5 GHz to 30 GHz	-3	-3	0	0	-3	-3
30 GHz to 32 GHz	-4	-4	-2	-2	-5	-5
32 GHz to 35 GHz	-2	-2	0	0	-2	-2
35 GHz to 43.5 GHz	-3	-3	-1	-1	-5	-5
43.5 GHz to 47 GHz	-6	-6	-5	-5	-23	-23
47 GHz to 50 GHz	-19	-19	-17	-17	-22	-22
Damage Level	+15 dBm					
Maximum DC Level	+/-7 VDC					

ООО "Техэнком" Контрольно-измерительные приборы и оборудование www.tehencom.com

Table 41a. Reference Output

(REF 2 SOURCE OUT, REF 3 SOURCE OUT, REF 4 SOURCE OUT) @ Max Specified Output Power

Description	Typical					
	Option 400 REF 3 Source Out Filtered Mode	Option 400 REF 3 Source Out Hi Pwr Mode	Option 200 or 400 REF 2 Source Out REF 4 Source Out Filtered Mode	Option 419 REF 3 Source Out Filtered Mode	Option 419 REF 3 Source Out Hi Pwr Mode	Option 219 or 419 REF 2 Source Out REF 4 Source Out Filtered Mode
Maximum Input Level						
10 MHz to 50 MHz	-31	-23	-27	-31	-26	-25
50 MHz to 500 MHz	-19	-14	-14	-18	-13	-14
500 MHz-to 1 GHz	-7	-2	-2	-6	-1	-2
1 GHz to 2 GHz	-7	-2	-2	-6	-2	-2
2 GHz to 3.2 GHz	-7	-5	-2	-4	-2	-2
3.2 GHz to 10 GHz	-1	-1	-1	1	1	-1
10 GHz to 16 GHz	-1	-1	-1	0	0	-2
16 GHz to 26.5 GHz	-1	-1	-1	1	1	-2
26.5 GHz to 30 GHz	0	0	-1	2	2	-3
30 GHz to 32 GHz	-1	-1	-2	0	0	-5
32 GHz to 35 GHz	0	0	-1	2	2	-3
35 GHz to 43.5 GHz	-2	-2	-2	0	0	-5
43.5 GHz to 47 GHz	-5	-5	-5	-4	-4	-9
47 GHz to 50 GHz	-17	-17	-17	-16	-16	-21
Damage Level	+15 dBm					
Maximum DC Level	0 VDC					

ООО "Техэнком" Контрольно-измерительные приборы и оборудование www.tehencom.com

Table 41b. Reference Output

(REF 2 SOURCE OUT, REF 3 SOURCE OUT, REF 4 SOURCE OUT) @ Max Specified Output Power

Description	Typical		
	Option423 REF 3 Source Out Filtered Mode	Options 423 REF 3 Source Out Hi Pwr Mode	Option 224 or 423 REF 2 Source Out REF 4 Source Out
Maximum Input Level			
10 MHz to 50 MHz	-31	-24	-29
50 MHz to 500 MHz	-18	-13	-16
500 MHz-to 1 GHz	-6	-1	-4
1 GHz to 2 GHz	-6	-1	-4
2 GHz to 3.2 GHz	-5	-3	-4
3.2 GHz to 10 GHz	0	0	0
10 GHz to 16 GHz	-2	-2	-2
16 GHz to 26.5 GHz	-2	-2	-2
26.5 GHz to 30 GHz	-1	-1	-2
30 GHz to 32 GHz	-3	-3	-4
32 GHz to 35 GHz	0	0	-2
35 GHz to 43.5 GHz	-3	-3	-4
43.5 GHz to 47 GHz	-22	-22	-8
47 GHz to 50 GHz	-21	-21	-21
Damage Level	+15 dBm		
Maximum DC Level	0 VDC		

ООО "Техэнком" Контрольно-измерительные приборы и оборудование www.tehencom.com

Table 42a. Source Outputs

(PORT 1 SOURCE OUT, PORT 2 SOURCE OUT, PORT 3 SOURCE OUT, PORT 4 SOURCE OUT) @ Max Specified Output Power

Description	Typical					
	Option 200 or 400 Port 1 Source Out Port 3 Source Out Filtered Mode	Option 200 or 400 Port 1 Source Out Port 3 Source Out Hi Pwr Mode	Option 200 or 400 Port 2 Source Out Port 4 Source Out	Option 219 or 419 Port 1 Source Out Port 3 Source Out Filtered Mode	Option 219 or 419 Port 1 Source Out Port 3 Source Out Hi Pwr Mode	Option 219 or 419 Port 2 Source Out Port 4 Source Out
Maximum Input Level						
10 MHz to 50 MHz[1]	4	12	12	5	10	13
50 MHz to 500 MHz[1]	8	13	13	9	14	14
500 MHz-to 1 GHz	8	13	13	9	14	14
1 GHz to 2 GHz	9	14	14	9	13	14
2 GHz to 3.2 GHz	9	11	14	9	11	14
3.2 GHz to 10 GHz	14	14	14	14	14	14
10 GHz to 16 GHz	14	14	14	13	13	13
16 GHz to 26.5 GHz	14	15	15	13	13	13
26.5 GHz to 30 GHz	14	14	14	12	12	12
30 GHz to 32 GHz	13	13	13	10	10	10
32 GHz to 35 GHz	14	14	14	12	12	12
35 GHz to 43.5 GHz	11	11	11	8	8	8
43.5 GHz to 47 GHz	8	8	8	4	4	4
47 GHz to 50 GHz	-5	-5	-5	-8	-8	-8
Damage Level	+30 dBm					
Maximum DC Level	0 VDC					

ООО "Техэнком" Контрольно-измерительные приборы и оборудование www.tehencom.com

Table 42b. Source Outputs

(PORT 1 SOURCE OUT, PORT 2 SOURCE OUT, PORT 3 SOURCE OUT, PORT 4 SOURCE OUT) @ Max Specified Output Power

Description	Typical		
	Option 224 or 423 Port 1 Source Out Port 3 Source Out Filtered Mode	Option 224 or 423 Port 1 Source Out Port 3 Source Out Hi Pwr Mode	Option 224 or 423 Port 2 Source Out Port 4 Source Out
Maximum Input Level			
10 MHz to 50 MHz[1]	5	12	11
50 MHz to 500 MHz[1]	9	14	14
500 MHz-to 1 GHz	9	14	14
1 GHz to 2 GHz	9	14	14
2 GHz to 3.2 GHz	9	11	14
3.2 GHz to 10 GHz	14	14	14
10 GHz to 16 GHz	13	13	13
16 GHz to 26.5 GHz	13	13	13
26.5 GHz to 30 GHz	12	12	12
30 GHz to 32 GHz	10	10	10
32 GHz to 35 GHz	12	12	12
35 GHz to 43.5 GHz	8	8	8
43.5 GHz to 47 GHz	3	3	3
47 GHz to 50 GHz	-9	-9	-10
Damage Level	+30 dBm		
Maximum DC Level	0 VDC		

ООО "Техэнком" Контрольно-измерительные приборы и оборудование www.tehencom.com

Table 43. Coupler Inputs

(PORT 1 CPLR THRU, PORT 2 CPLR THRU, PORT 3 CPLR THRU, PORT 4 CPLR THRU) Insertion Loss of Coupler Thru

Description	Typical	
	Option 200 or 400	Option 219 or 419 or 224, or 423
Maximum Input Level		
10 MHz to 50 MHz[1]	-0.25	-1
50 MHz to 500 MHz[1]	-0.25	-1
500 MHz-to 1 GHz	-0.5	-1
1 GHz to 2 GHz	-0.5	-1
2 GHz to 3.2 GHz	-1	-1
3.2 GHz to 10 GHz	-1	-1
10 GHz to 16 GHz	-1	-2
16 GHz to 26.5 GHz	-1.5	-2.5
26.5 GHz to 30 GHz	-2	-3
30 GHz to 32 GHz	-2	-3
32 GHz to 35 GHz	-2	-3
35 GHz to 43.5 GHz	-2.5	-4
43.5 GHz to 47 GHz	-2.5	-5
47 GHz to 50 GHz	-3	-6
Damage Level	+30 dBm	
Maximum DC Level	+/-40 VDC	

Test Set Block Diagrams

NOTE: For best readability, use a color printer for printing the following graphics.

Figure 15. 2-Port N5244A and N5245A Base Unit Option 200

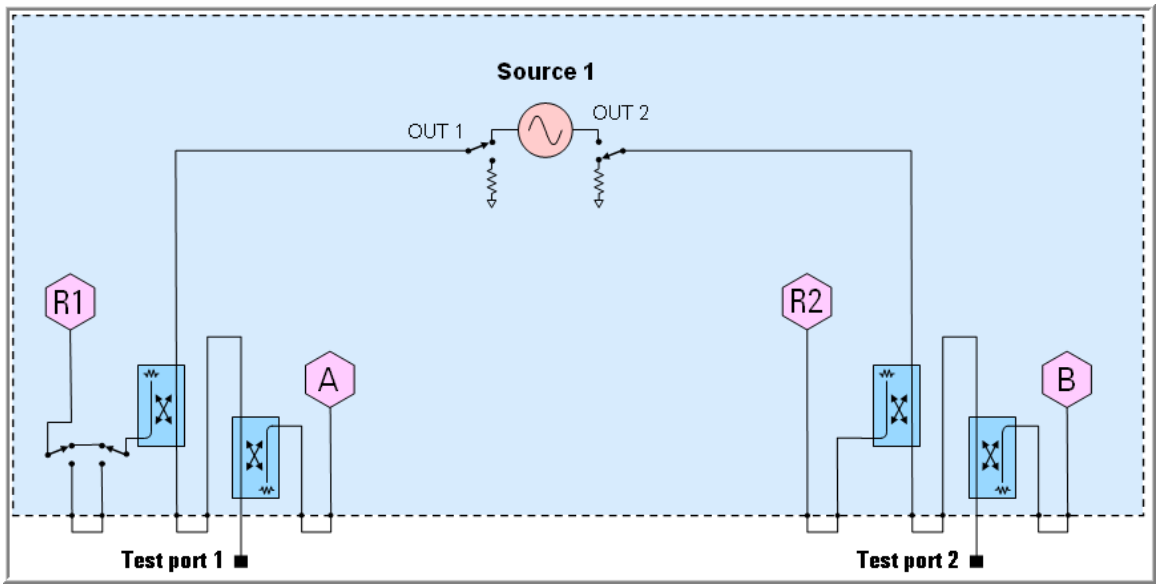

Figure 16. 2-Port N5244A and N5245A Option 219

Adds Extended power range: source and receiver attenuators, and bias-tees

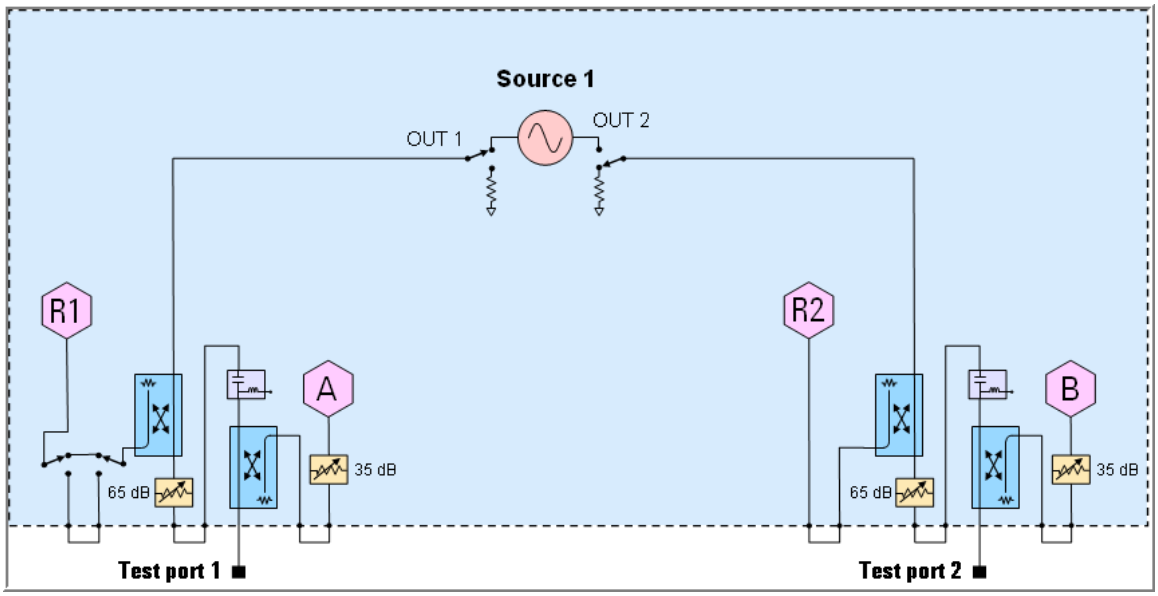

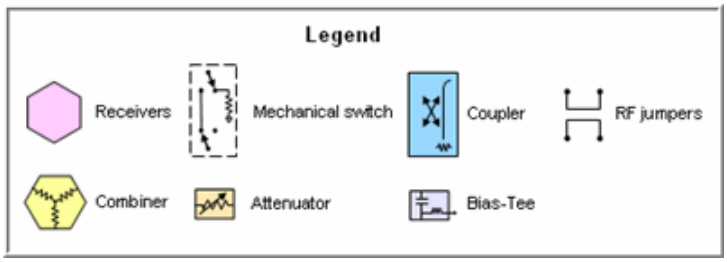

Figure 17. 2-Port N5244A and N5245A Option 224

Adds internal second source, combiner, and mechanical switches

Also shown, Option 025 adds 4 pulse generators. Option 020 and 021 adds pulse modulators.

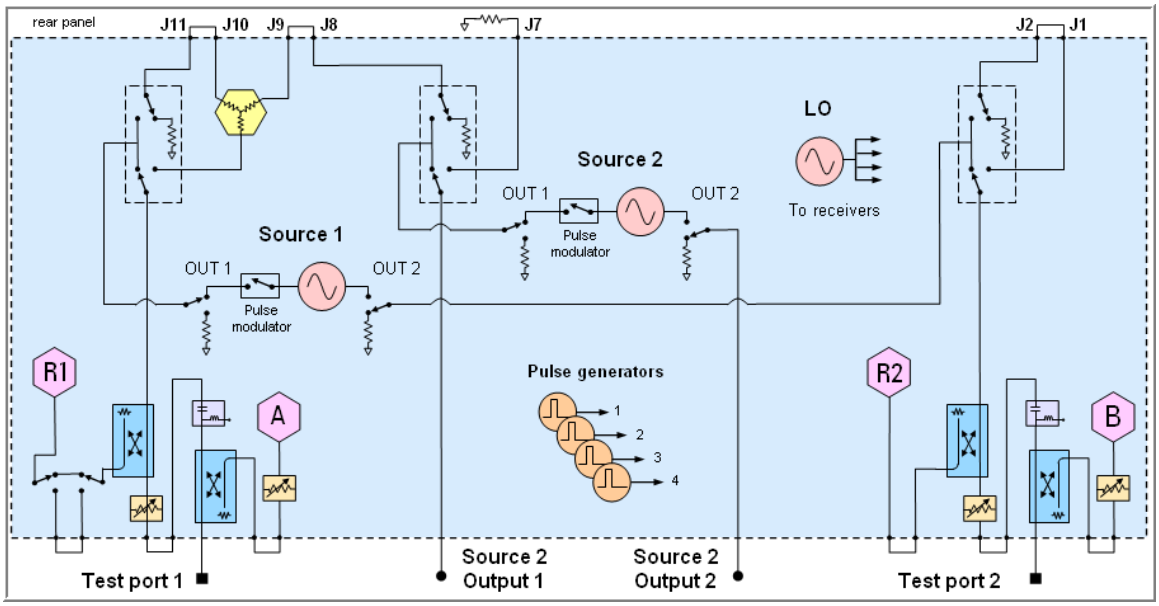

Figure 18. 4-Port N5244A and N5245A Base Unit - Option 400

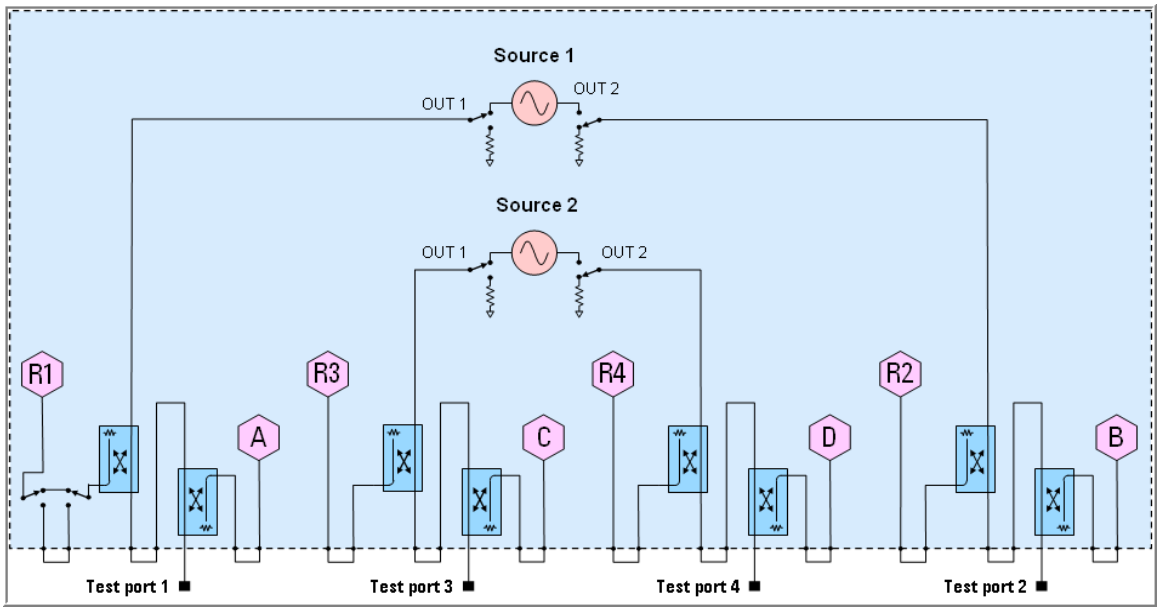

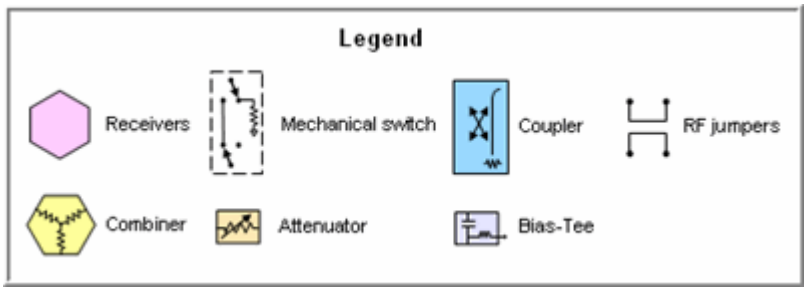

Figure 19. 4-Port N5244A and N5245A Option 419

Adds Extended power range: source and receiver attenuators, and bias-tees.

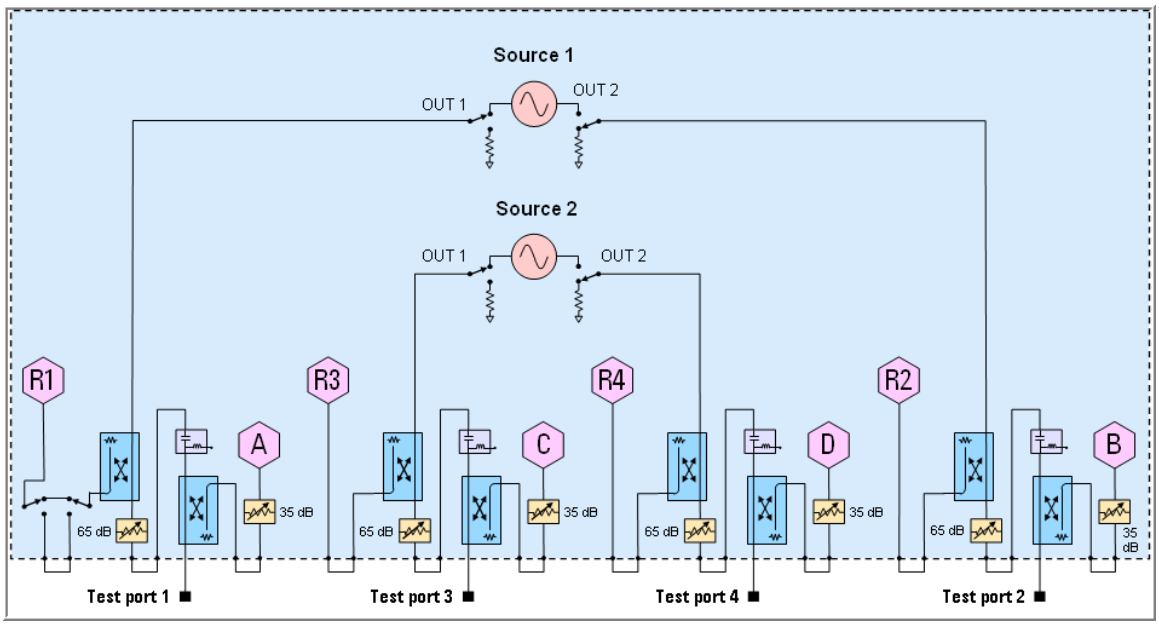

Figure 20. 4-Port N5244A and N5245A Option 423

Adds internal combiner and mechanical switches.

Also shown, Option 025 adds 4 pulse generators. Option 020 and 021 adds pulse modulators.

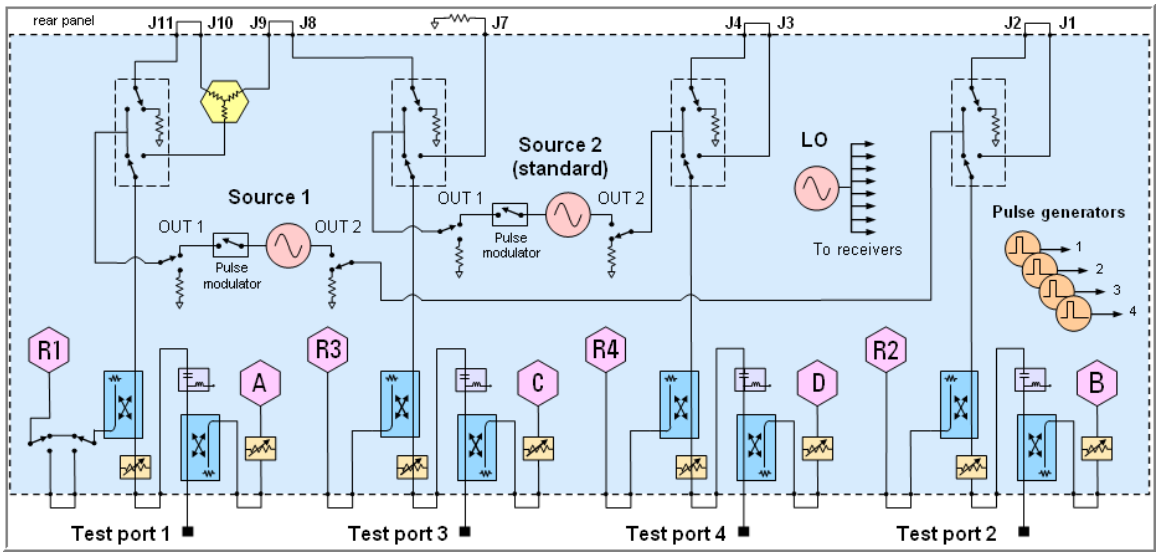

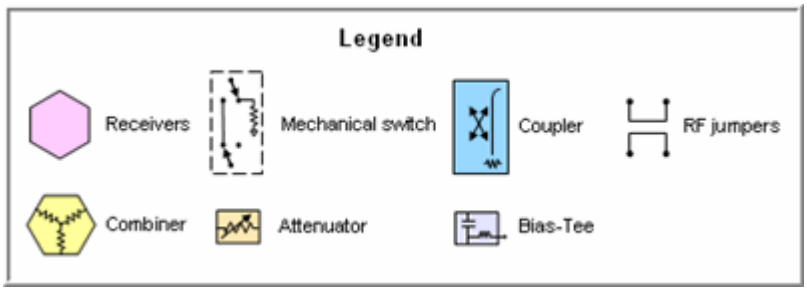

Figure 21. Receiver Block Diagram

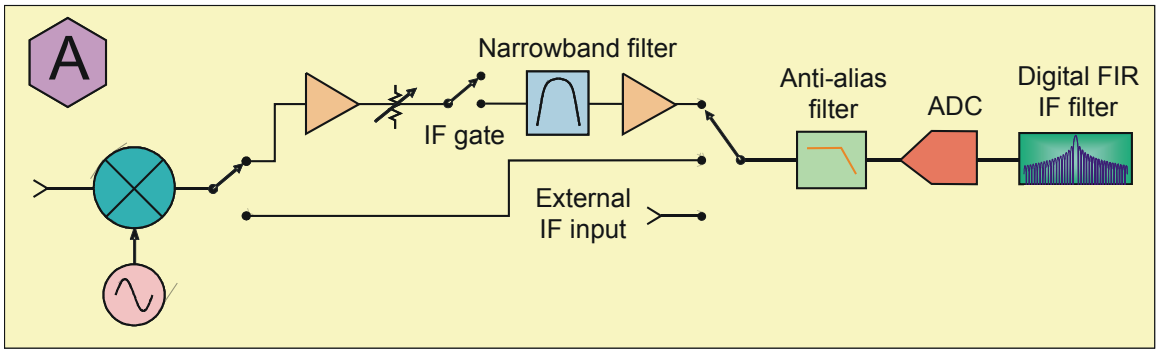

ООО "Техэнком" Контрольно-измерительные приборы и оборудование www.tehencom.com

Remove all doubt

Our repair and calibration services will get your equipment back to you, performing like new, when promised. You will get full value out of your Agilent equipment throughout its lifetime. Your equipment will be serviced by Agilent-trained technicians using the latest factory calibration procedures, automated repair diagnostics and genuine parts. You will always have the utmost confidence in your measurements.

Agilent offers a wide range of additional expert test and measurement services for your equipment, including initial start-up assistance onsite education and training, as well as design, system integration, and project management.

For more information on repair and calibration services, go to:

www.agilent.com/find/removealldoubt

Agilent Email Updates

www.agilent.com/find/emailupdates

Get the latest information on the products and applications you select.

Agilent Open

www.agilent.com/find/open

Agilent Open simplifies the process of connecting and programming test systems to help engineers design, validate and manufacture electronic products. Agilent offers open connectivity for a broad range of system-ready instruments, open industry software, PC-standard I/O and global support, which are combined to more easily integrate test system development.

www.agilent.com/find/pnax

For more information on Agilent Technologies' products, applications or services, please contact your local Agilent office. The complete list is a**vailable at:**

www.agilent.com/find/contactus

Phone or Fax

Americas	
Canada	(877) 894-4414
Latin America	305 269 7500
United States	(800) 829-4444
Asia Pacific	
Australia	1 800 629 485
China	800 810 0189
Hong Kong	800 938 693
India	1 800 112 929
Japan	81 426 56 7832
Korea	080 769 0800
Malaysia	1 800 888 848
Singapore	1 800 375 8100
Taiwan	0800 047 866
Thailand	1 800 226 008
Europe	
Austria	01 36027 71571
Belgium	32 (0) 2 404 93 40
Denmark	45 70 13 15 15
Finland	358 (0) 10 855 2100
France	0825 010 700*
	*0.125 €/minute
Germany	07031 464 6333**
	**0.14 €/minute
Ireland	1890 924 204
Italy	39 02 92 60 8 484
Netherlands	31 (0) 20 547 2111
Spain	34 (91) 631 3300
Sweden	0200-88 22 55
Switzerland	0800 80 53 53
United Kingdom	44 (0) 118 9276201

Other European Countries:
www.agilent.com/find/contactus

Product specifications and descriptions in this document subject to change without notice.

Manufacturing Part Number: N5245-90008
Printed in USA, June 17, 2010
Supersedes: June 9, 2010

© Agilent Technologies, Inc. 2007-2010

Agilent Technologies